TABLE OF CONTENTS

ARTICLE V 3
ZONING AND USE REGULATIONS 3
DIVISION 1 GENERAL 3
Section 5-100 Establishment of Zone Districts. 3
Section 5-101 Official Zoning Map. 3
Section 5-102 Interpretation of District Boundaries. 4
Section 5-103 General Applicability of District Regulations. 5
Section 5-104 One Principal Building Permitted On Any Lot. 5
Section 5-105 Payment of Property Taxes a Prerequisite to Approvals. 5
DIVISION 2 AMENDMENTS TO OFFICIAL ZONING MAP ("REZONING") 6
Section 5-200 Petitions to Amend Official Zoning Map. 6
Section 5-201 Petition for Map Amendment. 6
Section 5-202 Procedure For Map Amendment. 7
Section 5-203 Standards of Approval of Map Amendment. 8
Section 5-204 Conditions Upon Approval of Map Amendment. 9
Section 5-205 Standards for Evaluation of Application to Rezone Property Currently Zoned for Mining. 9
DIVISION 3 ZONE DISTRICT USE SCHEDULES 11
Section 5-300 Use Regulations and Use Schedules. 11
Section 5-301 Agricultural Zone District (A). 12
Section 5-302 Agricultural Small Lot Zone District (A-35). 14
Section 5-303 Conservation/Recreation Zone District 16
Section 5-304 Residential Zone District (R). 18
Section 5-305 Mountain Residential Zone District (MR). 20
Section 5-306 Rural Center Mixed Use (MU). 22
Section 5-307 Residential Estate Zone District (R-20). 24
Section 5-308 Residential Ranch Zone District (R-35). 26
Section 5-309 Commercial Zone District (C). 28
Section 5-310 Industrial Zone District (I). 30
Section 5-311 Mining Zone District (M). 32
Section 5-312 Recreational Vehicle Park and Campground Zone District (RVC). 35
Section 5-313 Planned Unit Development Zone District (PUD). 37
Section 5-314 Mobile Home Park Zone District (MHP). 43
DIVISION 4 OVERLAY AREAS 45
Section 5-400 Rural Center Overlay Areas. 45
Section 5-401 Cluster Development. 45
DIVISION 5 CONDITIONAL USE PERMITS 47
Section 5-500 Conditional Uses Generally 47
Section 5-501 Application for Conditional Use Permit. 47
Section 5-502 Procedure for Conditional Use Permit Review. 48
Section 5-503 Standards for Approval of Conditional Use Permit. 50
Section 5-504 Form of Approval of Conditional Use Permit. 50
Section 5-505 Conditions Authorized. 50
Section 5-506 Revocation of Conditional Use Permit. 51
Section 5-507 Amendment of a Conditional Use Permit. 52
Section 5-508 Compliance with Conditions Required. 52
Section 5-509 Required Standards for a Conditional Use Permit for Sexually Oriented Business 52
DIVISION 6 TEMPORARY USE PERMITS 55
Section 5-600 Temporary Use Permits 55
Section 5-602 Temporary Use Application Requirements 55
Section 5-603 Standards for Approval of a Temporary Use Permit 56

Section 5-604 Conditions on Approval of a Temporary Use Permit....56
Section 5-605 Revocation of Temporary Use Permit 56
DIVISION 7 USE REGULATIONS....57
Section 5-700 Generally. 57
Section 5-701 Animal Regulations. 57
Section 5-702 Bed and Breakfasts....62
Section 5-703 Reserved 62
Section 5-704 Reserved 62
Section 5-705 Home Occupations. 63
Section 5-706 Construction Dwellings. 63
Section 5-707 Outdoor Events. 64
Section 5-708 Fences. 69
Section 5-709 Lighting. 70
Section 5-710 Noise. 75
Section 5-711 Small Alternate Energy Systems. 75
Section 5-712 – Camping on Vacant Residential (MR, R, R-20, R-35) and Mining (M) Parcels. 77
Section 5-713 – Storage Containers. 78
DIVISION 8 SIGNS 79
Section 5-800 Signs Generally. 79
Section 5-801 Sign Area Measurement. 79
Section 5-802 Prohibited Signs....79
Section 5-803 Reserved. 79
Section 5-804 Authorized Permanent Signs....79
Section 5-805 Design Standards for Permanent Signs. 81
Section 5-806 Sign Exemptions. 81
Section 5-807 Temporary Signs....82
DIVISION 9 TELECOMMUNICATION FACILITIES 83
Section 5-900 Purpose and Exemption. 83
Section 5-901 Definitions. 83
Section 5-902 Permit Required. 85
Section 5-903 Application for Special Use Permit. 85
Section 5-904 Procedures for Review of Special Use Permit Applications. 88
Section 5-905 Design and Performance Standards. 90
Section 5-906 Standards for Application Approval. 94
Section 5-907 Modifications to Approved Facilities. 95
Section 5-908 Abandonment. 96
Section 5-909 Expiration, Revocation, and Inspections 97
Section 5-910 Removal of Facilities. 97
DIVISION 10 OIL AND GAS OPERATIONS....98
Section 5-1000 Purpose. 98
Section 5-1001 Authority....98
Section 5-1002 Applicability. 98
Section 5-1003 Application Submittal Requirements for Oil and Gas Permits. 99
Section 5-1004 Coordination with State or Federal Actions and County Permit Process. 102
Section 5-1005 Permit Review Procedures for Oil and Gas Operations. 102
Section 5-1006 Oil and Gas Operation Standards. 104
Section 5-1007 Public Notice. 106
Section 5-1008 Enforcement and Penalties. 107
Section 5-1009 Permit Duration. 108
Section 5-1010 Amending this Section. 108
Section 5-1011 Definitions. 109

ARTICLE V

ZONING AND USE REGULATIONS

DIVISION 1 GENERAL

Section 5-100 Establishment of Zone Districts.

A. Purpose. The purpose of this Article is to protect the health, safety, and public welfare through the control and regulation of the location and use of property within Park County, Colorado.

B. Zone Districts Established. The following zone districts are hereby established for purposes of regulating land uses within Park County.

A	Agricultural Zone District
A-35	Agricultural Small Lot Zone District
CR	Conservation/Recreation Zone District
R	Residential Zone District
MR	Mountain Residential Zone District
R-20	Residential Estate Zone District
R-35	Residential Ranch Zone District
MU	Rural Center Mixed Use Zone District
C	Commercial Zone District
I	Industrial Zone District
M	Mining Zone District
RVC	Recreational Vehicle Park and Campground Zone District
MHP	Mobile Home Park Zone District
PUD	Planned Unit Development Zone District

Section 5-101 Official Zoning Map.

A. Division of County Into Zone Districts by Official Zoning Map. The unincorporated area of Park County is divided into zone districts necessary to achieve compatibility of uses and uniformity of character within each zone district, implement the Park County Strategic Master Plan, and to achieve the purposes of these Land Use Regulations. The boundaries of the zone districts and overlay districts are established on the map entitled “Official Zoning District Map of Park County, Colorado” as such map has been amended by the Board of County Commissioners. The Official Zoning District Map, and all explanatory materials contained thereon, shall be incorporated into these Land Use Regulations by reference and made a part hereof.

B. Amendments and Replacement of Official Zoning Map. No amendment shall be made in the district boundaries or other matter shown on the Official Zoning Map except by resolution adopted in accordance with Division 2 of this Article. Any amendment adopted by the Board of County Commissioners shall be entered on the Official Zoning Map. The Official Zoning Map shall be updated quarterly or at such interval, not less than once each year, as the Planning Director/County designee deems appropriate. If the Official Zoning Map becomes damaged, destroyed, lost, or difficult to interpret or reproduce because of the nature or number of changes and additions, the Board of County Commissioners may, by resolution, adopt a new official zoning map. The new zoning map may implement all zoning changes made by resolution adopted by the Board of County Commissioners and/or correct drafting or other errors or omissions in the prior map.

Section 5-102 Interpretation of District Boundaries.

A. Administrative Determination Authorized. The Planning Director/County designee is authorized to make an administrative determination concerning the location of any zone district boundary by application of the rules provided in this Section. The Director's determination and any appeal of such determination shall be subject to the provisions of Article III, Division 2.

B. Interpretive Rules. Where uncertainty exists as to the boundaries of zone districts as shown on the Official Zoning Map, the following rules shall apply:

1. Boundaries indicated as approximately following the centerline of streets or roads shall be construed to follow the centerline.

2. Boundaries indicated as approximately following platted lot lines shall be construed as following the lot lines.

3. Boundaries indicated as parallel to or extensions of centerlines, lot lines, municipal limits, federal lands ownership, or similar geographic lines shall be so construed.

4. The scale of the map shall determine distances not specifically indicated on the Official Zoning Map.

5. Whenever any street, alley or other public way is vacated by official action of the Board of County Commissioners, or whenever street or alley area is otherwise made available for building purposes, the zoning district line adjoining each side of such street, alley or other public way shall be automatically extended to the centerline of such vacated street, alley or way, and all area so involved shall then be subject to all regulations of the extended zone districts.

6. Where physical or cultural features existing on the ground are at variance with those shown on the Official Zoning Map, or in circumstances not addressed by subsections (1) through (5) of this section, the Planning Director/County designee shall administratively interpret the district boundaries subject to appeal as provided by Section 3-204 of the Land Use Regulations.

C. Land Divided by Zone District Boundary. Where, following application of the interpretive rules of subsection (B) above, a Lot or other parcel under single ownership is divided by a Zone district boundary such that portions of the property are within two or more zone districts, the following rules shall apply:

1. For Lots or parcels equal to or less than ten (10) acres in size, the zone district attributable to the greatest percentage of the property shall govern and apply to the entire property. For example, where zone districts divide a ten (10) acre lot so that six (6) acres (60%) is within the Residential Zone District and four (4) acres (40%) is within the Commercial Zone District, the entire ten (10) acre property shall be deemed zoned within the Residential Zone District.

2. For Lots or parcels greater than ten (10) acres in size, the zone district boundaries shall govern the uses permitted within the Lot or parcel subject to the limitation upon the number of permitted structures within each lot provided by Section 5-104 of these Land Use Regulations. For example, where a twenty (20) acre Lot is divided by zone districts so that ten (10) acre is within the Residential Zone District and ten (10) acres is within the Commercial Zone District, the uses permitted within the portion of the Lot zoned within the Residential Zone District shall be those permitted in the Residential Zone District and the uses permitted within the portion of the Lot zoned in the Commercial Zone District shall be those permitted in the Commercial Zone District provided that, no more than one

principal permitted use is permitted within the entire twenty (20) acre Lot as required by Section 5-104.

Section 5-103 General Applicability of District Regulations.

Except as may be otherwise provided in this Article

A. No structure shall hereafter be erected, reconstructed, altered, enlarged, or moved, nor shall any building or land be used for any purpose, other than for a use permitted in this Article in the zone district in which it is located.

B. No structure shall hereafter be erected, reconstructed, altered, enlarged, or moved unless it conforms to the area regulations of the applicable zone district in which it is located.

C. No setback or other open space required in this Article for any structure shall be considered as providing a setback or open space for any other structure, and no setback or open space on an adjoining lot or parcel shall be considered as providing a setback or open space on a lot whereon a structure is to be erected.

D. No structure shall hereafter be erected, reconstructed, altered, enlarged or moved nor shall any building or land be used for any purpose unless a building permit for the structure, building or land, if required by these Land Use Regulations and any other applicable County law or regulation, has been properly and lawfully issued by the County.

E. No structure shall hereafter be erected, reconstructed, altered, enlarged or moved, nor shall any building or land be used for any purpose in contravention of any element of a County-approved plan presented by an owner, developer, petitioner or the agent of the owner, developer, or petitioner expressed at a hearing or as part of a presentation to obtain any land use approval as required by these Land Use Regulations.

Section 5-104 One Principal Building Permitted On Any Lot.

Not more than one Principal Building shall be located on a Lot, unless such buildings are:

A. Lawfully recognized nonconforming buildings; or

B. Expressly permitted by these Land Use Regulations; or

C. Approved as part of a Planned Unit Development (PUD) for the property.

D. The division of a Lot or parcel by a zone district boundary shall not entitle the owner to more than one principal building or structure for such Lot.

Section 5-105 Payment of Property Taxes a Prerequisite to Approvals.

No approval or permit pursuant to this Article V, including but not limited to any zoning map amendment, rezoning, planned unit development amendment, conditional use permit, temporary use permit, special use permit, home occupation permit, outdoor event permit, lighting plan approval, comprehensive sign plan approval or telecommunications facility special use permit shall be granted unless and until all ad valorem property taxes and special assessments applicable to the property for which the permit or approval is sought have been paid current.

DIVISION 2 AMENDMENTS TO OFFICIAL ZONING MAP ("REZONING")

Section 5-200 Petitions to Amend Official Zoning Map.

A. County May Initiate Petition. The Board of County Commissioners may, on its own motion or upon initial recommendation of the Planning Commission, direct the Planning Director/County designee to petition the County to amend the Official Zoning Map in accordance with the procedures of this Division.

B. Owner's Petition to Initiate Action. The Board of County Commissioners may, upon the petition of any owner of a fee simple interest in the property subject to such petition, amend the Official Zoning Map in accordance with the procedures of this Division.

Section 5-201 Petition for Map Amendment.

Content of Petition. All petitions submitted pursuant to Section 5-200 for an amendment of the Official Zoning Map shall be made on forms prepared by the Planning Department and shall contain the following information:

A. A completed application in the form approved by the Director;

B. Payment of all required application fees and any review fee deposit;

C. An executed Agreement for Payment of Development Review Expenses if applicable;

D. Evidence of Ownership and Encumbrances as defined by Article IV of these Land Use Regulations;

E. A complete legal description of the property proposed for zoning map amendment prepared by a licensed registered Colorado Land surveyor or, for County-initiated petitions only, prepared by the Planning Director/County designee, County Attorney, or County Surveyor (in most cases, a copy of the legal description contained in the deed will suffice);

F. A list of the names and mailing addresses, as this information appears of record with the Park County Assessor's Office, of all owners Adjacent Property[1] to the property proposed for zoning map amendment;

G. A signed and notarized certification from the Applicant that proper notice has been provided to the mineral estate owner pursuant to and in accordance with Colorado Revised Statutes §24-65.5-103, or a certification that such notice is not required because the surface estate has not been separated from the mineral estate for the property described in the application. A form of certification is provided in Appendix B.

H. A map or other description of the current condition of the property to be rezoned ("Current Conditions Map") including, in one or more mapped, narrative, or graphic formats, the following information:

1. Topography of the property shown in elevation contours of not greater than ten (10) foot increments. Applicants are encouraged to use the U.S.G.S. topographic mapping or other form of commercially produced topographic map.

2. Points of access to the property, internal roads, and trails including widths and approximate grades. The Current Conditions Map must illustrate how access is obtained from the property subject to zone map amendment to the nearest county road or highway.

[1] See Article IV, Definitions, "Adjacent Property"

3. Where any access to the property subject to the zone map amendment is obtained from a road, trail, easement, driveway or other private right of access other than an adjacent County-owned highway, street, or road, the applicant shall provide evidence of permanent legal right of access. Such evidence may include, but not be limited to, deed, easement agreement, or attorney opinion that a permanent legal right of access exists to the property.

4. Natural features of the property subject to rezoning including: wetlands, floodplain, riparian areas, and water bodies (e.g., lakes, ponds, streams, whether continuous or seasonal) rock outcroppings, significant vegetation, geological or other hazards, and slopes greater than 25 percent (25%).

5. Utility systems including existing and proposed water wells, sewer systems, electric services, and natural gas.

I. Proposed Development Plan describing in mapped form and/or text the existing and proposed physical improvements of the property and approximate locations of improvements.

J. Evidence that property taxes have been paid current.

Section 5-202 Procedure For Map Amendment.

A. Director's Completeness Determination. All petitions for zoning map amendment shall be delivered to the Planning Director/County designee. No petition for zoning map amendment shall be processed or scheduled for processing before the Planning Commission or the Board of County Commissioners unless the Planning Director/County designee deems the petition complete and all required information and documentation is submitted to the Planning Director/County designee.

B. Planning Commission Review. Prior to approval of any proposed map amendment, the petition for amendment shall be submitted to the Planning Commission for review and consideration. For purpose of this section, the "date of submission" shall be the date of the presentation of the draft resolution to the Commission at a regular or special meeting of the Commission. The Planning Commission's review of the petition shall be conducted at a public hearing. Within sixty (60) days of the date of submission of the petition to the Commission, the Commission shall endeavor to render its recommendation to the BOCC. The Planning Commission's failure to render for approval or disapproval any recommendation to the BOCC within sixty (60) days of the date of submission of the proposed map amendment to the Commission may be deemed by the BOCC as a recommendation for approval of the proposed amendment by the Planning Commission.

Form of Notice.

1. Required Notice. In accordance with Colorado Revised Statutes § 30-28-116, notice of public hearing for amendment of the Official Zoning Map shall be published in the official County newspaper or in a newspaper of general circulation within Park County at least fourteen (14) days before the date of the hearing.

2. Additional Notice. The County shall provide additional notice of the proposed application and hearing by mailing and posting notice in accordance with this section.

a. Mailing. A notice by mail shall be deposited in the United States Mail; first class postage prepaid or shall be delivered by another comparable service, including hand-delivery to the address. The deposit in the U.S. Mail or delivery to another comparable service should be made at least fourteen (14) days before the date of the hearing. Failure of the addressee to receive notice shall not be deemed sufficient cause to require a postponement, mailing of notice, or invalidation of

the hearing. Mailed notice shall be addressed to owners of Adjacent Property[2] as their names appear in the real property records of the Park County Assessor or Park County Clerk and Recorder. For purposes of determining addressees for mailed notice, the County may rely upon the ownership information provided by the Applicant as part of the application.

b. Posting. A notice by posting shall be made by the Planning Department's posting of a sign approved by the Planning Director/County designee on or reasonably near the property that is subject to the hearing in a location that is reasonably determined by the County to provide the greatest degree of visibility to members of the public. In most instances, the posting shall be made along the primary traveled public right-of-way adjacent to or leading to the property. Posting should be initially made at least fourteen (14) days before the date of the hearing. At the outset of each hearing, the Planning Department should provide evidence of posting in accordance with this section to the Planning Commission or the Board of County Commissioners, as appropriate. Such evidence should be in the form of photographs showing the posted sign or other document evidencing the time, date, and location of the posting.

C. Board of County Commissioners Public Hearing. Before rendering a final decision on a petition for a map amendment, the Board of County Commissioners shall hold a public hearing on the petition. Notice of the public hearing shall be provided as follows:

Content of Notice. The notice of public hearing shall include the date, time, place, and general purpose of the hearing, and a general description of the property affected. The general description may be stated by: (a) a metes and bounds description; or (b) by lot and block of a recorded subdivision plat; or (c) by a reference to intersecting roads, compass directions relating the property to such intersection, and a statement of the approximate acreage involved. The Planning Department may include other information deemed appropriate by the Department to apprise the public of the general nature of the action proposed.

Section 5-203 Standards of Approval of Map Amendment.

A. In considering any petition for amendment of the Official Zoning Map, the following standard shall govern. The applicant for the proposed amendment shall bear the burden of proof and the resolution approving the zoning map amendment shall be approved and adopted only if it is demonstrated by clear and convincing evidence presented during the public hearing that the following conditions or circumstances exist:

1. The property possesses geological, physical, and other environmental conditions that are compatible with the potential uses permitted in the proposed zone district; and

2. The property has a reasonably certain right of permanent legal access permitting vehicular ingress and egress from the property to the public thoroughfare; and

3. Access to the property from the public thoroughfare reasonably meets County street, road, or driveway standards or, if the property is undeveloped, such access will be established prior to issuance of a building permit; and

4. The potential uses of the property within the proposed zone district are compatible with other properties within the immediately surrounding area; and

5. And at least one of the following:

[2] See Article IV, Definitions, "Adjacent Property"

a. The rezoning, as proposed, is consistent with the advisory provisions of the Park County Strategic Master Plan; or

b. The rezoning, as proposed, is supported by circumstances and conditions within the immediate area which have changed since the adoption of the Park County Strategic Master Plan; or

c. The rezoning, as proposed, is to a Planned Unit Development.

B. For applications to rezone property to Rural Center Mixed Use Zone (MU), see Article V, Section 5-306.

Section 5-204 Conditions Upon Approval of Map Amendment.

The Board of County Commissioners may impose reasonable conditions on the approval of any amendment of the Official Zoning Map where such conditions are necessary to ensure the continuing use of the property in conformance with the requirements of the zoning district and the requirements of these Land Use Regulations, or if such conditions are necessary in order to ensure that the proposed amendment will satisfy the criteria for approval required by Section 5-203.

Section 5-205 Standards for Evaluation of Application to Rezone Property Currently Zoned for Mining.

In addition to the standards set forth in Section 5-203 above, in evaluating an application to rezone property currently zoned for mining, the Planning Department, the Planning Commission, and the Board of County Commissioners shall consider the following:

A. The building envelope on the property must be at an elevation of not more than 11,500 feet.

B. The patent, plat, field notes and connected sheets of the mining claim of the subject property and land status maps of property located within a one mile radius of the subject property's boundaries, all of which must be submitted with the application. (These documents may be obtained from the BLM Offices located at 2850 Youngfield Street, Lakewood, Colorado.)

C. A copy of the U.S.G.S. quadrangle (topographic) map of the area with the subject property drawn on the map.

D. The application must include a geo-technical report prepared by a qualified Geo-technical professional utilizing the information and guidelines contained in *"Guidelines and Criteria for Identification and Land Use Controls of Geological Hazard and Mineral Resource Areas,"* Colorado Geological Survey Publication 6, or the updated version of this publication. The geo-technical report must be accompanied by a statement of the engineer's qualifications relative to geology, mine economics and geological hazards. At a minimum, this report must address the following information specific to the property in question, all of which shall be considered in evaluating an application:

1. The presence and extent of any geological hazards, including but not limited to, underground excavations on or adjacent to the subject property and radioactive or toxic materials and/or minerals.

2. The presence of surface and subsurface minerals, including but not limited to, the types and amounts of minerals present and the viability of mineral extraction now and in the future.

3. The extent of any previous mining activity at the property, referring to the information listed in paragraph C above.

E. If the application for rezoning is approved, then the applicant may be required to record documentation prepared by the County Attorney disclosing the potential for geologic hazards at the property, assuming the risk associated with non-mining use of the property and indemnifying the County from all injury and claims resulting from said use of the property.

F. The impact, if any, the rezoning would have on present and future operations of nearby mining operations.

DIVISION 3 ZONE DISTRICT USE SCHEDULES

Section 5-300 Use Regulations and Use Schedules.

A. Use Regulations Generally. No land shall hereafter be used, and no building or structure shall hereafter be occupied, used, erected, placed, or converted that is arranged or designed to be used or used for other than those uses allowed for the district in which it is located.

B. Use Classification. Uses within zoning districts are classified as Permitted, Conditional, or Temporary by this article.

Uses that were *lawfully* established prior to the adoption of this Article, but that are inconsistent with the requirements of this Division, shall be permitted if such uses meet the requirements of Section 9-101 of Article IX, entitled Nonconforming Uses:

1. Permitted Uses. A use identified as a Permitted Use in a particular zone district shall be permitted as a use-by-right in such district, subject to compliance with all applicable conditions and provisions of this Article and any other applicable provision of these Land Use Regulations.

2. Conditional Uses. A use identified as a Conditional Use in a particular zone district shall be permitted in such district and upon specific property only upon approval of a Conditional Use Permit by the Board of County Commissioners in accordance with the procedures and standards of Division 5 of this Article, entitled Conditional Uses. There is no presumption that a Conditional Use is compatible with other uses in the zone district or that such uses in the zone district or that such use must be approved in every instance for the zone district in which it may be authorized. Approval of a Conditional Use Permit shall not be construed as an amendment of the Official Zoning Map, but shall be a permit authorizing the use conditioned upon these Land Use Regulations and the conditions imposed upon such permit.

3. Temporary Uses. A use identified as a Temporary Use in a particular zone district shall be permitted in such district only upon issuance of a Temporary Use Permit in accordance with the procedures and standards of Division 6 of this Article, entitled Temporary Use Permits. Approval of a temporary use permit shall not be construed as an amendment of the Official Zoning Map, but shall be a permit authorizing the use conditioned upon these Land Use Regulations and the conditions imposed upon such permit.

4. Uses not identified or determined by the Planning Director/County designee as reasonably similar to an authorized use in a particular district are not lawful or allowed in such district. Refer to Land Use Regulations for Administrative Decisions and Board of County Commissioner decisions (Article III, Division 2, Pages 5-7).

5. Administrative interpretations will be posted to website www.parkco.us.

Section 5-301 Agricultural Zone District (A).

A. Purpose. The purpose of the Agricultural Zone District is to protect lands for uses consistent with agricultural and ranching activities.

B. Special Note. Tracts zoned within the Agricultural Zone District that were divided into lots of less than 160 acres, or 35 acres or more prior to August 2, 1983, or tracts less than 35 acres created prior to June 1, 1972, are recognized as non-conforming and legal lots within the Agricultural Zone District for which development permits may be issued for the uses permitted in this Section.

TABLE 5-301
Schedule of Uses – Agricultural Zone District

Use See Article IV for Definitions	SPECIAL REGULATIONS	USE AUTHORIZED AS:		
		Permitted	Conditional (See Division 5 Article V)	Temporary (See Division 6 Article V)
Agricultural & Ranching	See Section 5-701.	X		
Agricultural Associated Housing (2 Dwelling Units or Less) Agricultural Associated Housing (3 Dwelling Units or More)		X	X	
Animal Feed Operation		X		
Animal Sanctuary on lots ≥ 35 acres			X	
Bed & Breakfast	See Section 5-702	X		
Camping	See Definitions	X		
Campground, Commercial	See Section 5-312		X	
Cemetery Commercial Family	See Definitions	X	X	
Church In-home Neighborhood Scale Mega-Church		X	X X	
Community / Central Water or Wastewater System	With Applicable Local, State & Federal Permits	X		
Concentrated Feed Operations			X	
Construction Dwelling	See Section 5-705	X		
Conference & Retreat Facility			X	
County Facilities		X		
Craft Studio		X		
Crisis Center		X		
Day Care, Commercial			X	
Day Care, Home	With Applicable Local and/or State License(s)	X		
Emergency Services Facility			X	
Fraternal Organization	See Definitions		X	
Golf Course	With Applicable Local, State & Federal Permits		X	
Group Home, Residential & Specialized, on 160 Acre or Larger	With Applicable Local, State & Federal License(s)		X	
Greenhouse (Commercial)		X		
Guest House		X		
Guest Ranch ≥160 acres		X		
Guest Ranch <160 and ≥ 35 acres			X	

Use See Article IV for Definitions	SPECIAL REGULATIONS	USE AUTHORIZED AS:		
		Permitted	Conditional (See Division 5 Article V)	Temporary (See Division 6 Article V)
Heavy Industrial Use, Road Construction Related on ≥ 160 acres	See Art. V Div. 6			X
Kennel on lot ≥ 35 acres		X		
Landfill			X	
Museum		X		
Nursery Retail / Wholesale		X		
Outdoor Event	See Section 5-707			X
Parking Lot				X
Private Air Strip, Helipad (FAA Sanctioned)		X		
Professional Office		X		
Racetrack, Animals			X	
Racetrack, Motorized Vehicles			X	
Recycling Facility			X	
Marijuana Cultivation – Optional Premises (Medical) and Retail (Recreational)	With Applicable Local and/or State License(s)	X		
Marijuana Infused Product Manufacturing – Retail (Recreational) and Medical	With Applicable Local and/or State License(s)	X		
Riding Arena, Private or Commercial Indoor Outdoor		 X X		
Sand and Gravel Extraction			X	
Single Family Dwelling Unit & Accessory Structures* on 160 Acres or Larger Lot Accessory Uses Home Occupation, Minor Home Occupation, Major		X X 	 X	
Shooting Range (Commercial/Private)			X	
Stable Private Commercial ≥ 35 acres		 X X		
Telecommunication Facility	Special Use Permit Required, see Division 9 of Article V			
Transfer Station			X	
Utility Facility County Major Minor		 X X	 X 	
Veterinarian Small Animal Large Animal		 X X		

*An accessory structure, regardless of primary structure, is permitted on parcels thirty–five (35) acres or larger.

TABLE 5-301a
New Lot Development Standards – Agricultural Zone District

Standards	Maximum	Minimum
Lot Area	N/A	160 Acres
*Floor Area Per Unit – Principal Structure Residential Non-Residential	 N/A N/A	 N/A N/A
Structure Height	50 Feet	
Setbacks – Principal & Accessory Structures		
Any Side From Any Watercourse		50 Feet
Any Side From Any Wetland		50 Feet
Front: Adjacent to State/Federal Highway		50 Feet
Front: Adjacent to All Other Roads		30 Feet
Side		30 Feet
Rear		20 Feet

* Structures must meet applicable building codes

Section 5-302 Agricultural Small Lot Zone District (A-35).

Purpose. The purpose of the Agricultural Small Lot Zone District is to protect lands for uses consistent with rural residential and smaller scale agricultural and ranching activities on lawfully recognized lots that are smaller than 160 acres in size.

TABLE 5-302
Schedule of Uses – Agricultural Small Lot Zone District (A-35)

Use See Article IV for Definitions	SPECIAL REGULATIONS	USE AUTHORIZED AS:		
		Permitted	Conditional (See Division 5 Article V)	Temporary (See Division 6 Article V)
Agricultural & Ranching	See Section 5-701	X		
Agricultural Associated Housing			X	
Camping	See Definitions	X		
Bed & Breakfast	See Section 5-702	X		
Campground, Commercial	See Section 5-312		X	
Cemetery Commercial Family	See Definitions		 X X	
Church In-home Neighborhood Scale		 X	 X	
Community Center			X	
Community / Central Water or Wastewater System	With Applicable Local, State & Federal Permits	X		
Construction Dwelling	See Section 5-705	X		
Conference & Retreat Facility			X	
County Facilities		X		
Craft Studio		X		
Crisis Center			X	
Day Care, Home	With Applicable Local and/or State License(s)	X		
Emergency Services Facility			X	
Fraternal Organization	See Definitions		X	
Golf Course	With Applicable Local, State & Federal Permits		X	
Greenhouse (Commercial)		X		
Group Home, Residential & Specialized	With Applicable Local, State & Federal License(s)		X	
Guest House		X		
Guest Ranch			X	
Kennel			X	
Marijuana Cultivation –Optional Premises (Medical) and Retail (Recreational)	With Applicable Local and/or State License(s)	X		
Marijuana Infused Product Manufacturing – Retail (Recreational) and Medical	With Applicable Local and/or State License(s)	X		
Outdoor Event	See Section 5-707			X
Private Air Strip, Helipad (FAA Sanctioned)			X	
Professional Office		X		
Recreational Facility, Indoor or Outdoor			X	
Racetrack, Animals			X	
Racetrack, Motorized Vehicles			X	
Riding Arena, Indoor or Outdoor Private Commercial		 X	 X	

Use See Article IV for Definitions	SPECIAL REGULATIONS	USE AUTHORIZED AS:		
		Permitted	Conditional (See Division 5 Article V)	Temporary (See Division 6 Article V)
Single Family Dwelling Unit & Accessory Structures* (Not more than 4 Accessory Structures)	See Definitions	X		
Accessory Uses				
Home Occupation, Minor		X		
Home Occupation, Major			X	
Stable				
Private		X		
Commercial			X	
Telecommunication Facility	Special Use Permit Required, see Division 9 of Article V			
Utility Facility				
County		X		
Major			X	
Minor		X		
Veterinarian				
Small Animal		X		
Large Animal		X		

*An accessory structure, regardless of primary structure, is permitted on parcels thirty-five (35) acres or larger. Lots in the A35 Zone District may have no more than four accessory structures.

TABLE 5-302a
New Lot Development Standards – Agricultural Small Lot Zone District (A-35)

Standards	Maximum	Minimum
Lot Area	N/A	35 Acres
*Floor Area Per Unit - Principal Structure		
Residential	N/A	N/A
Non-Residential	N/A	N/A
Structure Height	50 Feet	
Setbacks – Principal & Accessory Structures		
Any Side From Any Watercourse		50 Feet
Any Side From Any Wetland		50 Feet
Front: Adjacent to State/Federal Highway		50 Feet
Front: Adjacent to All Other Roads		30 Feet
Side		30 Feet
Rear		20 Feet

* Structures must meet applicable building codes.

Section 5-303 Conservation/Recreation Zone District

Purpose. The purpose of the Conservation/Recreation Zone District is to protect lands for uses consistent with agricultural, ranching, forestry, public recreation, and natural area preservation. Only Federal, State or County owned lands may be zoned (CR).

TABLE 5-303
Schedule of Uses – Conservation/Recreation Zone District

Use See Article IV for Definitions	SPECIAL REGULATIONS	USE AUTHORIZED AS:		
		Permitted	Conditional (See Division 5 Article V)	Temporary (See Division 6 Article V)
Agricultural and Ranching		X		
Campground, Commercial	See Section 5-312	X		
Camping	See Definitions	X		
Cemetery (Commercial / Family)	See Definitions		X	
Church, Neighborhood Scale			X	
Community / Central Water or Wastewater System	With Applicable Local, State & Federal Permits	X		
Conference & Retreat Facility			X	
County Facilities		X		
Crisis Center			X	
Emergency Services Facility			X	
Fraternal Organization	See Definitions		X	
Golf Course	With Applicable Local, State & Federal Permits	X		
Mining	See Table Footnote 1	X		
Oil and Gas Operations	Special Use Permit Required. See Division 10 of Article V.			
Outdoor Event	See Section 5-707			X
Recreational Facility, Indoor		X		
Recreational Facility, Outdoor		X		
Riding Arena, Private or Commercial Indoor Outdoor		 X X		
Sand & Gravel Extraction	See Table Footnote 1	X		
Shooting Range			X	
Stable, Commercial		X		
Telecommunication Facility	Special Use Permit Required. See Division 9 of Article V.			
Utility Facility County Major Minor		 X X	 X 	

Table Footnotes:

Mining Use and Sand and Gravel Extraction shall be authorized only where the following conditions are met or satisfied as demonstrated during a formal administrative review by the Planning Director or designee:

1. On-Site Sewage Disposal: All on-site sewage disposal systems shall be sited, designed, and constructed in compliance with local and state health standards.

2. Hazardous Substances: All state and federal requirements for handing and storage of hazardous substances shall be satisfied.

3. Access to Public Roads: Access onto County roads require a permit from the County Road and Bridge Department, and onto State highways, from the State Highway Department.

4. Signs: Signs shall comply with the performance standards of Division 8, Article V.

5. Noise: All mining uses shall demonstrate continuing compliance with any applicable state and federal noise standards.

6. Light, Glare: Any use that regularly directs excessive light, glare, or heat beyond the property line shall be prohibited.

7. Shielding: Welding equipment and similar sources of intense light shall be shielded from neighboring properties or public ways by enclosure in a building, location on the property, construction of a fence or wall, or a landscaped buffer.

8. Interference: Any use, which creates electrical interference beyond the property line, shall be prohibited.

9. Solid Waste Storage: Solid waste shall be stored in an enclosed building or in bear-proof containers and handled in a manner that does not: (a) attract bears, rodents, flies, or other animals or pests; (2) generate odors, perceptible beyond the property boundaries; (3) create liquid runoff onto soil or off-site; and (4) permit the blowing of paper and other trash or waste.

10. Runoff: Construction or use that channels storm or melt water runoff in a manner that adversely impacts neighboring properties or public ways shall be prohibited.

11. Licenses and Permits. All uses shall be operated only in accordance with federal and state licensing and permitting requirements.

TABLE 5-303a
New Lot Development Standards – Conservation/Recreation Zone District

Standards	Maximum	Minimum
*Floor Area Per Unit		N/A
*Structure Height (No more than four accessory structures per lot)	50 Feet	
Setbacks – Principal & Accessory Structures		
Any Side From Any Watercourse		50 Feet
Any Side From Any Wetland		50 Feet
Front: Adjacent to State/Federal Highway		50 Feet
Front: Adjacent to All Other Roads		30 Feet
Side		30 Feet
Rear		20 Feet

*Structures must meet applicable building codes.

Section 5-304 Residential Zone District (R).

Purpose. The purpose of the Residential Zone District is to provide for residential neighborhoods comprised of detached, single-family dwellings at relatively low density. See Section 5-701 for Animal Regulations.

TABLE 5-304
Schedule of Uses – Residential Zone District

Use See Article IV for Definitions	SPECIAL REGULATIONS	USE AUTHORIZED AS:		
		Permitted	Conditional (See Division 5 Article V)	Temporary (See Division 6 Article V)
Bed & Breakfast	See Section 5-702		X	
Camping	See Section 5-712			X
Church In-home Neighborhood Scale		 X 	 X	
Community Center			X	
Community / Central Water or Wastewater System	With Applicable Local, State & Federal Permits	X		
Construction Dwelling	See Section 5-705	X		
County Facility		X		
Crisis Center			X	
Day Care, Home	With Applicable Local and/or State License(s)	X		
Dwelling Units, Duplex*			X	
Educational Facility, Primary		X		
Educational Facility, Secondary (or Primary and Secondary)			X	
Educational Facility, Post-Secondary			X	
Educational Facility, Trade/Business School			X	
Emergency Services Facility			X	
Fraternal Organization	See Definitions		X	
Golf Course	With Applicable Local, State & Federal Permits		X	
Group Home, Residential & Specialized	With Applicable Local, State & Federal License(s)		X	
Guest House			X	
Model Home (associated with 25 lot or larger Subdivision)				X
Recreational Facility, Indoor or Outdoor	With Applicable Local, State & Federal License(s)		X	
Single Family Dwelling Unit & Accessory Structures* (Not more than 2 Accessory Structures) Home Occupation, Minor Home Occupation, Major		X X 	 X	
Telecommunication Facility	Special Use Permit Required. See Division 9 of Article V.			
Utility Facility County Major Minor		 X X	 X 	

* A Single Family Residence or a Duplex, but not both, can occupy a lot.

TABLE 5-304a
New Lot Development Standards – Residential Zone District

Standards	Maximum	Minimum
Lot Area		
>50% of Lot 20% Slope or Less	N/A	5 Acres
>50% of Lot 20% Slope or More	N/A	6 Acres
>50% of Lot Greater than 30% Slope	N/A	8 Acres
Lot Width	N/A	50 Feet
*Floor Area Per Unit - Principal Structure		
Residential	N/A	N/A
Non-Residential	N/A	N/A
*Structure Height	35 Feet	
Setbacks – Principal & Accessory Structures		
Any Side From Any Watercourse		50 Feet
Any Side From Any Wetland		50 Feet
Front: Adjacent to State/Federal Highway		50 Feet
Front: Adjacent to All Other Roads		30 Feet
Side		30 Feet
Rear		20 Feet

* Structures must meet applicable building codes.

Section 5-305 Mountain Residential Zone District (MR).

Purpose. The purpose of the Mountain Residential Zone District is to accommodate residential use in certain mountain areas and to provide for neighborhoods comprised of detached single family dwellings, with standards, similar to those in the Residential (R) Zoned District, but providing for certain additional and varying standards.

TABLE 5-305
Schedule of Uses – Mountain Residential Zone District (MR)

Use See Article IV for Definitions	SPECIAL REGULATIONS	USE AUTHORIZED AS:		
		Permitted	Conditional (See Division 5 Article V)	Temporary (See Division 6 Article V)
Camping	See Section 5-712			X
Church In-home Neighborhood Scale		X	X	
Community Center			X	
Community / Central Water or Wastewater System	With Applicable Local, State & Federal Permits	X		
Construction Dwelling	See Section 5-705	X		
County Facilities		X		
Crisis Center			X	
Day Care, Home	With Applicable Local and/or State License(s)	X		
Dwelling Units, Duplex	See Table Footnote 2	X		
Educational Facility, Primary		X		
Educational Facility, Secondary (or Primary and Secondary)		X		
Educational Facility, Post-Secondary			X	
Educational Facility, Trade/Business School			X	
Emergency Services Facility			X	
Fraternal Organization	See Definitions		X	
Golf Course	With Applicable Local, State & Federal Permits		X	
Group Home, Residential & Specialized	With Applicable Local, State & Federal License(s)		X	
Guest House			X	
Model Home (associated with 25 lot or larger Subdivision)				X
Recreational Facility, Indoor or Outdoor			X	
Riding Arena, Private Indoor Outdoor		X X		
Single Family Dwelling Unit & Accessory Structures* (Not more than 2 Accessory Structures) Home Occupation, Major Home Occupation, Minor Livestock (Horses Only)	See Table Footnote 1	X X X	X	
Stable. Private		X		
Telecommunication Facility	Special Use Permit Required. See Division 9 of Article V.			

Use See Article IV for Definitions	SPECIAL REGULATIONS	USE AUTHORIZED AS:		
		Permitted	Conditional (See Division 5 Article V)	Temporary (See Division 6 Article V)
Utility Facility				
County		X		
Major			X	
Minor		X		

TABLE 5-305a
New Lot Development Standards – Mountain Residential Zone District (MR)

Standards	Maximum	Minimum
Lot Area	N/A	10 Acres
*Floor Area Per Unit		
Residential (Principal Structure)	N/A	N/A
Non-Residential	N/A	N/A
*Structure Height	35 Feet	
Setbacks – Principal & Accessory Structures (No more than two Accessory Structures per lot.)		
Any Side From Any Watercourse		50 Feet
Any Side From Any Wetland		50 Feet
Front: Adjacent to State/Federal Highway		50 Feet
Front: Adjacent to All Other Roads		30 Feet
Side		30 Feet
Rear		20 Feet

* Structures must meet applicable building codes.

Table Footnotes:

1. Livestock in Mountain Residential (MR) Zone District. No Livestock, other than horses and youth agrarian project animals, shall be permitted to be raised, pastured, quartered, or otherwise maintained within the Mountain Residential (MR) Zone District. Subsequent properties are subject to compliance of the following regulations:

    A. The minimum area of open lot space area not having structures/buildings shall be 20,000 square feet for the keeping of one horse, and the total number of horses that may be kept shall not exceed one horse for each additional 20,000 square feet of a Lot that is not devoted to structures.

    B. All horses shall be kept corralled within a fenced area, suitable to manage and prevent escape of the animal, consisting of materials such as rails, pipes, boards, or chain link fabric. The use of barbed wire is prohibited for fencing corral areas for horses. Barbed wire may be used in outer perimeter fences to exclude cattle pursuant to Colorado Fence Law Colorado Revised Statutes §35-46-101 through Colorado Revised Statutes §35-46-114.

    C. All corrals, stalls, and barns shall be located at least one hundred (100) feet from any dwelling unit or water supply source.

    D. Temporary storage of manure and/or odor and/or dust producing material shall be located at least one hundred (100) feet from any dwelling unit.

    E. All corrals, stalls, and barns shall be routinely cleared of waste products, which shall be removed from the property to prevent unsightliness and potential health hazards.

2. A single family-dwelling unit or duplex is permitted, but not both.

Section 5-306 Rural Center Mixed Use (MU).

Purpose. The purpose of the Rural Center Mixed Use Zone District (MU) is to accommodate a mix of residential and small scale commercial and office uses in keeping with the historic use of the unincorporated Rural Centers. Rural Centers are defined in Section 5-400. The Rural Center Mixed Use Zone District is restricted to application within identified Rural Center Overlay areas as identified in Division 4 of this Article 5.

TABLE 5-306
Schedule of Uses – Rural Center Mixed Use Zone District (MU)

Use See Article IV for Definitions	SPECIAL REGULATIONS	USE AUTHORIZED AS:		
		Permitted	Conditional (See Division 5 Article V)	Temporary (See Division 6 Article V)
Bar or Tavern		X		
Bed & Breakfast	See Section 5-702	X		
Car Wash	With Applicable Local, State & Federal Permits	X		
Church In-home Neighborhood Scale		X	X	
Conference & Retreat Facility	With Applicable Local and/or State License(s)	X		
Community / Central Water or Wastewater System	With Applicable Local, State & Federal Permits	X		
County Facilities		X		
Craft Studio		X		
Crisis Center		X		
Day Care, Commercial or Home	With Applicable Local and/or State License(s)	X		
Dwelling Units Single Family Duplex Multi-family		 X X X		
Educational Facility, Primary		X		
Educational Facility, Secondary (or Primary and Secondary)			X	
Educational Facility, Post-Secondary			X	
Educational Facility, Trade/Business School			X	
Emergency Services Facility			X	
Fraternal Organization	See Definition		X	
Group Home, Residential & Specialized	With Applicable Local, State & Federal License(s)		X	
Guest House		X		
Health Clinic		X		
Home Occupation Major Minor		 X X		
Hotel or Motel (Inn)		X		
Kennel			X	
Laundry & Dry-Cleaning Facility, Individual Service		X		

Use See Article IV for Definitions	SPECIAL REGULATIONS	USE AUTHORIZED AS:		
		Permitted	Conditional (See Division 5 Article V)	Temporary (See Division 6 Article V)
Laundry & Dry-Cleaning Plant, Commercial	With Applicable Local, State & Federal Permits		X	
Mortuary or Funeral Home		X		
Nursery Retail / Wholesale		X		
Outdoor Event				X
Park and Ride		X		
Parking Lot, Commercial			X	
Personal Services		X		
Professional Office		X		
Recreational Facility, Indoor		X		
Recreational Facility, Outdoor			X	
Refurbishing			X	
Restaurant		X		
Retail Store (Excluding Slaughterhouses)		X		
Shooting Range, Indoor			X	
Storage Structures		X		
Mixed Use Development		X		
Taxicab Service		X		
Telecommunication Facility	Special Use Permit Required. See Division 9 of Article V.			
Utility Facility County Major Minor		 X X	 X 	
Vehicle Repair Service		X		
Vehicle Sales or Rental			X	
Vehicle Service Station		X		
Veterinarian, Small or Large Animal		X		

TABLE 5-306a
New Lot Development Standards – Rural Center Mixed Use Zone District

Standards	Maximum	Minimum
*Floor Area Per Unit – Principal Structure Residential		N/A
*Structure Height	40 Feet	
Setbacks – Principal & Accessory Structures (No more than two Accessory Structures per lot)		
Any Side From Any Watercourse		50 Feet
Any Side From Any Wetland		50 Feet
Front: Adjacent to State/Federal Highway		10 Feet
Front: Adjacent to All Other Roads		5 Feet
Side		0 Feet
Rear		5 Feet

* Structures must meet applicable building codes.

Section 5-307 Residential Estate Zone District (R-20).

Purpose The purpose of the Residential Estate (R-20) Zone District is to protect lands for uses consistent with rural and low density residential uses accompanied, where conducted appropriately, by the keeping of livestock and smaller scale agricultural operations.

TABLE 5-307
Schedule of Uses- Residential Estate (R-20)

Use See Article IV for Definitions	SPECIAL REGULATIONS	USE AUTHORIZED AS:		
		Permitted	Conditional (See Division 5 Article V)	Temporary (See Division 6 Article V)
Agriculture & Ranching	See Section 5-701	X		
Bed & Breakfast	See Section 5-702		X	
Camping	See Section 5-712			X
Church In-home Neighborhood Scale		 X 	 X	
Community Center			X	
Community / Central Water or Wastewater System	With Applicable Local, State & Federal Permits	X		
Construction Dwelling	See Section 5-705	X		
County Facilities		X		
Craft Studio		X		
Crisis Center			X	
Day Care, Home	With Applicable Local and/or State License(s)	X		
Dwelling Units, Duplex	See Table Footnote 1	X		
Emergency Services Facility	See Definitions		X	
Fraternal Organization	See Definitions		X	
Greenhouse (Commercial)			X	
Group Home, Residential & Specialized	With Applicable Local, State & Federal License(s)		X	
Guest House		X		
Kennel			X	
Model Home (associated with 25 lot or larger Subdivision)				X
Nursery Retail/Wholesale			~~X~~	
Recreational Facility, Indoor or Outdoor	With Applicable Local, State & Federal License(s)		X	
Riding Arena, Private Indoor Outdoor		 X X		
Single Family Dwelling Unit & Accessory Structures* (Not more than 4 Accessory Structures) Home Occupation, Major Home Occupation, Minor	See Table Footnote 1	X X	 X 	
Stable, Private		X		
Telecommunication Facility	Special Use Permit Required. See Division 9 of Article V.			
Utility Facility County Major Minor		 X X	 X 	

***** An accessory structure, regardless of primary structure is permitted on parcels thirty-five (35) acres or larger. No more than four Accessory Structures are allowed on each lot.

TABLE 5-307a
New Lot Development Standards – Residential Estate Zone District

Standards	Maximum	Minimum
Lot Area	N/A	20 Acres
*Floor Area Per Unit – Principal Structure		N/A
*Structure Height	35 Feet	
Setbacks – Principal & Accessory Structures		
Any Side From Any Watercourse		50 Feet
Any Side From Any Wetland		50 Feet
Front: Adjacent to State/Federal Highway		50 Feet
Front: Adjacent to All Other Roads		30 Feet
Side		30 Feet
Rear		20 Feet

* Structures must meet applicable building codes.

Table Footnotes:

1. A single family dwelling or duplex is permitted, but not both.

Section 5-308 Residential Ranch Zone District (R-35).

Purpose. The purpose of the Residential Ranch Zone District is to protect larger tracts of lands for residential use with smaller and accessory ranch or agricultural operations. This zone district is intended to be limited in its application to properties that were subdivided by the County or lawfully divided in accordance with the state statutory exemption for thirty-five (35) acre or larger tracts without County approval, but which also have established, reasonable, and safe access via publicly accessible roads conforming to applicable County road standards.

TABLE 5-308
Schedule of Uses – Residential Ranch Zone District (R-35)

Use See Article IV for Definitions	SPECIAL REGULATIONS	USE AUTHORIZED AS:		
		Permitted	Conditional (See Division 5 Article V)	Temporary (See Division 6 Article V)
Agriculture & Ranching	See Section 5-701	X		
Bed & Breakfast	See Section 5-702		X	
Camping	See Section 5-712			X
Church In-home Neighborhood Scale		X	 X	
Community Center			X	
Community / Central Water or Wastewater System	With Applicable Local, State & Federal Permits	X		
Conference & Retreat Facility	With Applicable Local, State & Federal Permits		X	
Construction Dwelling	See Section 5-705	X		
County Facilities		X		
Craft Studio		X		
Crisis Center			X	
Day Care, Home	With Applicable Local and/or State License(s)	X		
Dwelling Units, Duplex	See Table Footnote 1	X		
Emergency Services Facility			X	
Fraternal Organization	See Definitions		X	
Greenhouse (Commercial)			X	
Group Home, Residential & Specialized	With Applicable Local, State & Federal License(s)		X	
Guest House		X		
Kennel			X	
Nursery Retail/Wholesale			X	
Recreational Facility, Indoor or Outdoor	With Applicable Local, State & Federal License(s)		X	
Riding Arena, Private Indoor Outdoor		 X X		
Single Family Dwelling Unit & Accessory Structures* (Not more than 4 Accessory Structures) Home Occupation, Major Home Occupation, Minor	See Table Footnote 1	X X	 X 	
Stable, Private		X		
Telecommunication Facility	Special Use Permit Required. See Division 9 of Article V.			

Use See Article IV for Definitions	SPECIAL REGULATIONS	USE AUTHORIZED AS:		
		Permitted	Conditional (See Division 5 Article V)	Temporary (See Division 6 Article V)
Utility Facility				
County		X		
Major			X	
Minor		X		

* An accessory structure regardless of primary structure is permitted on parcels thirty-five (35) acres or larger. No more than four Accessory Structures are permitted per lot.

TABLE 5-308a
New Lot Development Standards – Residential Ranch Zone District

Standards	Maximum	Minimum
Lot Area	N/A	35 Acres
*Floor Area Per Unit – Principal Structure		N/A
*Structure Height	35 Feet	
Setbacks – Principal & Accessory Structures		
Any Side From Any Watercourse		50 Feet
Any Side From Any Wetland		50 Feet
Front: Adjacent to State/Federal Highway		50 Feet
Front: Adjacent to All Other Roads		30 Feet
Side		30 Feet
Rear		20 Feet

* Structures must meet applicable building codes.

Table Footnotes

1. A single family dwelling unit or duplex is permitted, but not both.

Section 5-309 Commercial Zone District (C).

Purpose. The purpose of the Commercial Zone District is to provide for commercial and service business in areas designated as appropriate for such activity by the strategic master plan.

TABLE 5-309
Schedule of Uses – Commercial Zone District

Use See Article IV for Definitions	SPECIAL REGULATIONS	USE AUTHORIZED AS:		
		Permitted	Conditional (See Division 5 Article V)	Temporary (See Division 6 Article V)
Bar or Tavern		X		
Bed & Breakfast		X		
Car Wash	With Applicable Local, State & Federal Permits	X		
Church In-home Neighborhood Scale		 X X		
Community / Central Water or Wastewater System	With Applicable Local, State & Federal Permits	X		
Community Center			X	
Conference & Retreat Facility	With Applicable Local, State & Federal License(s)	X		
County Facilities		X		
Crisis Center		X		
Day Care, Commercial or Home	With Applicable Local and/or State License(s)	X		
Educational Facility, Trade/Business School			X	
Emergency Services Facility			X	
Fraternal Organization	See Definitions		X	
Group Home, Residential & Specialized	With Applicable Local, State & Federal License(s)		X	
Health Clinic		X		
Home Occupation (in existing Nonconforming Single Family Residential Dwelling Unit) Major Minor		 X X		
Homeless Shelter			X	
Hospital			X	
Hotel or Motel (Inn)		X		
Industrial, Light	With Applicable Local, State & Federal Permits	X		
Kennel			X	
Laundry & Dry-Cleaning Facility, Individual Service		X		
Laundry & Dry Cleaning Plant, Commercial	With Applicable Local, State & Federal Permits	X		
Marijuana Cultivation –Optional Premises (Medical) and Retail (Recreational)	With Applicable Local and/or State License(s)	X		
Marijuana Infused Product Manufacturing – Retail (Recreational) and Medical	With Applicable Local and/or State License(s)	X		
Marijuana Retail Store and Medical Marijuana Center	With Applicable Local and/or State License(s)	X		
Marijuana Testing Facility	With Applicable Local and/or State License(s)	X		
Mortuary or Funeral Home		X		

Use See Article IV for Definitions	SPECIAL REGULATIONS	USE AUTHORIZED AS:		
		Permitted	Conditional (See Division 5 Article V)	Temporary (See Division 6 Article V)
Nursery Retail / Wholesale		X		
Outdoor Event				X
Park and Ride		X		
Parking – Commercial			X	
Personal Services		X		
Private Club		X		
Professional Office		X		
Racetrack Animals Motorized Vehicles			 X X	
Recreational Facility, Indoor or Outdoor			X	
Recycling Facility		X		
Refurbishing		X		
Retail Store (Excluding Slaughterhouses)		X		
Restaurant		X		
Salvage Yard			X	
Sexually Oriented Business	See Section 5-509		X	
Shooting Range, Indoor			X	
Storage Units, Rental		X		
Taxi Cab Service		X		
Telecommunication Facility	Special Use Permit Required. See Division 9 of Article V.			
Utility Facility County Major Minor		 X X	 X 	
Vehicle Body Repair		X		
Vehicle Service Station		X		
Vehicle Repair Service		X		
Vehicle Sales or Rental		X		
Vehicle Storage Yard		X		
Veterinarian Small Animal Large Animal		 X X		
Warehouse		X		

TABLE 5-309a
New Lot Development Standards – Commercial Zone District

Standards	Maximum	Minimum
Floor Area Per Unit – Principal Structure		N/A
Lot Area		N/A
*Structure Height	40 Feet	N/A
Setbacks – Principal and Accessory Structures (No more than two Accessory Structures per Lot)		
Any Side From Any Watercourse		50 FEET
Any Side From Any Wetland		50 FEET
Front: Adjacent to State/Federal Highway		10 FEET
Front: Adjacent to All Other Roads		5 FEET
Side		0 FEET
Rear		5 FEET

* Structures must meet applicable building codes.

Section 5-310 Industrial Zone District (I).

A. Purpose. This zoning district is created for the purpose of regulating lands for industrial uses.

B. Special Note: The Industrial Zone District is intended for application to areas designated as appropriate for commercial and industrial development by the Park County Strategic Master Plan.

TABLE 5-310
Schedule of Uses – Industrial Zone District

Use See Article IV for Definitions	SPECIAL REGULATIONS	USE AUTHORIZED AS:		
		Permitted	Conditional (See Division 5 Article V)	Temporary (See Division 6 Article V)
Community Waste Water System		X		
Crisis Center		X		
**Educational Facility, Trade/Business School			X	
***Emergency Services Facility			X	
**Fraternal Organization			X	
Group Home, Residential & Specialized	With Applicable Local, State & Federal License(s)		X	
Heavy Vehicle and Equipment Storage Yard		X		
Industrial Heavy Light		 X	 X 	
Jail			X	
Landfill			X	
Marijuana Cultivation – Optional Premises (Medical) and Retail (Recreational)	With Applicable Local and/or State License(s)	X		
Marijuana Infused Product Manufacturing – Retail (Recreational) and Medical	With Applicable Local and/or State License(s)	X		
Marijuana Retail Store and Medical Marijuana Center	With Applicable Local and/or State License(s)	X		
Marijuana Testing Facility	With Applicable Local and/or State License(s)	X		
Mortuary, Funeral Home			X	
Nursery Retail/Wholesale		X		
Oil and Gas Production	Special Use Permit Required. See division 10 Of Article V			
Optional Premises Medical & Retail Marijuana Cultivation	With Applicable Local and/or State License(s)	X		
Park & Ride			X	
Pipeline, Gas or Slurry			X	
Recycling Facility			X	
Refurbishing		X		
Salvage Yard		X		
Shooting Range, Indoor		X		
Telecommunication Facility	Special Use Permit Required. See division 9 of Article V			
Transfer Station	With Applicable Local, State & Federal Permits	X		
***Utility Facility County ***Major Minor		 X X	 X 	
Vehicle Body Repair		X		
Vehicle Center		X		
Vehicle Gas Station		X		
Vehicle Repair Service		X		
Vehicle Sales		X		
Vehicle Storage Yard		X		
Warehouse		X		

[6] See Division 4 of this Article V for Rural Center Overlay Areas

TABLE 5-310a
New Lot Development Standards – Industrial Zone District

Standards	Maximum	Minimum
Building Height	50 Feet	
Setbacks – Principal & Accessory Structures		
Any Side From Any Watercourse		50 Feet
Any Side From Any Wetland		50 Feet
Front: Adjacent to State/Federal Highway		50 Feet
Front: Adjacent to All Other Roads		25 Feet
Side		25 Feet
Rear		25 Feet

* Structures must meet applicable building codes.

Section 5-311 Mining Zone District (M).

Purpose. This zoning district is created for the purpose of protecting lands for the extraction of mineral deposits. Limited residential use is permitted only where the owner of such use recognizes and understands that the residential character of the property may be adversely impacted by the predominant mining use.

TABLE 5-311
Schedule of Uses – Mining Zone District

Use See Article IV for Definitions	SPECIAL REGULATIONS	USE AUTHORIZED AS:		
		Permitted	Conditional (See Division 5 Article V)	Temporary (See Division 6 Article V)
Bed & Breakfast			X	
Camping	See Section 5-712			X
Emergency Services Facility			X	
Fraternal Organization	See Definitions		X	
Heavy Industrial Use, Mining Related	See Table Footnote 1	X		
Heavy Industrial Use, Road Construction Related	See Art. V Div. 6			X
Mining Associated Housing (Permanent)			X	
Mining	See Table Footnote 1	X		
Museum		X		
Oil and Gas Operations	Special Use Permit Required. See Division 10 of Article V.			
Onsite Processing of Minerals	See Table Footnote 1	X		
Retail Store		X		
Single Family Dwelling Unit (Not Related to Mining or Oil & Gas Production)	See Footnotes 2 & 4		X	
Sand and Gravel Extraction	See Table Footnote 1	X		
Telecommunications Facility	Special Use Permit Required. See Division 9 of Article V.			
Utility Facility County Major Minor		 X X	 X 	

TABLE 5-311a
New Lot Development Standards – Mining Zone District (M)

Standards	Maximum	Minimum
Floor Area Per Unit – Principal Structure* Mining Associated Structure Residential		 N/A N/A
*Structure Height Non-Residential Mining Associated Housing	 65 Feet 35 Feet	
Setbacks – Principal & Accessory Structures (No more than four Accessory Structures related to Mining use and no more than two Accessory Structures related to Residential use per lot.) For Any Property Line Adjacent to Another Mining (M) Zone District For Any Property Line Adjacent to a Zone District other than Mining (M) Zone District		 None 50 Feet
Setbacks – Earth Disturbance and Extraction Activity For Any Property Line Adjacent to Another Mining (M) Zone District For Any Property Line Adjacent to a Zone District other than Mining (M) Zone District		 None 50 Feet
Any Side From Any Watercourse		50 Feet
Any Side From Any Wetland		50 Feet

* Structures must meet applicable building codes.

Table Footnotes:

1. Mining Use and sand and gravel extraction shall be authorized only where the following conditions are met or satisfied as demonstrated during a formal administrative review by the Planning Director or designee:

   A. On-Site Sewage Disposal: All on-site sewage disposal systems shall be sited, designed, and constructed in compliance with local and state health standards.

   B. Hazardous Substances: All state and federal requirements for handling and storage of hazardous substances shall be satisfied.

   C. Access to Public Roads: Access onto County roads require a permit from the County Road and Bridge Department, and onto State highways, from the State Highway Department.

   D. Signs: Signs shall comply with the performance standards of Division 8, Article V.

   E. Noise: All mining uses shall demonstrate continuing compliance with any applicable state and federal noise standards.

   F. Light, Glare: Any use that regularly directs excessive light, glare, or heat beyond the property line shall be prohibited.

   G. Shielding: Welding equipment and similar sources of intense light shall be shielded from neighboring properties or public way by enclosure in a building, location on the property, construction of a fence or wall, or a landscaped buffer.

   H. Interference: Any use that creates electrical interference beyond the property line shall be prohibited.

   I. Solid Waste Storage: Solid waste shall be stored in an enclosed building or in bear-proof containers and handled in a manner that does not: (1) attract bears, rodents, flies, or other animals or pests; (2) generate odors, perceptible beyond the property boundaries; (3) create liquid runoff onto soil or off-site; and (4) permit the blowing of paper and other trash or waste.

   J. Runoff: Construction or use that channels storm or melt water runoff in a manner that adversely impacts neighboring properties or public ways shall be prohibited.

   K. Permits and Licenses. All uses shall be operated only in accordance with federal and state licensing and permitting requirements.

2. Applications for a Conditional Use Permit for Single Family Dwelling (not related to mining or oil and gas production) shall meet all of the following requirements:

   A. All applications shall conform to the Conditional Use Permit requirements stated in Division 5 of Article 5.

   B. All applications, including the required geo-technical report, shall be forwarded to the Colorado Geological Survey for a review and evaluation of the proposed use and site constraints. The applicant shall pay all costs assessed or charged by the Colorado Geological Survey for the review and processing of the application. Within fifteen (15) days following the County's receipt of a report from the Colorado Geological Survey, the applicant shall submit a written response to the Planning Director/County designee addressing in detail the applicant's proposed methods for mitigating any hazards or concerns identified by the Colorado Geological Survey. Applicants are strongly

encouraged to adopt and employ all mitigation measures recommended by the Colorado Geological Survey. No application shall be deemed complete and no review of the application by the County shall be initiated until an evaluation and report from the Colorado Geological Survey is received by the County, the applicant has paid all fees associated with such review by the Colorado Geological Survey, and the applicant has submitted its response to the Planning Director/County designee as required by this paragraph.

C. Applicants shall submit a report addressing the absence or presence of commercially valuable mineral resources on the proposed site and adjacent sites as part of the application. The applicant bears the burden of establishing that the proposed residential use does not conflict or interfere with the mining of mineral resources located within the property described in the application or within adjacent properties.

D. Single Family Dwelling Unit (Not Related to Mining or Oil and Gas Production) shall be deemed incompatible with the purpose and intent of the Mining Zone District and no Conditional Use Permit shall be granted by the County unless the applicant establishes by competent and sufficient evidence presented to the County that:

1. The residential use meets all review standards for Conditional Uses contained in Division 4 of Article III of the Park County Land Use Regulations; and

2. The proposed residential use on the site will not present a hazard to the occupants of the residential structure or that all hazards identified for the site are or will be mitigated by the applicant; and

3. The proposed residential use will not conflict or interfere with the mining of mineral resources located within the property described in the application for conditional use or on adjacent properties; and

4. The proposed residential use will not interfere with or impair historical access to adjacent uses, properties, or mining claims; and

5. The Applicant has delivered to the County a signed and notarized certification that proper notice has been provided to the mineral estate owner pursuant to and in accordance with Colorado Revised Statutes §24-65.5-103, or a certification that such notice is not required because the surface estate has not been separated from the mineral estate for the property described in the application. A form of certification is provided in Appendix B.

E. The County shall record a copy of each approved Conditional Use Permit with the Clerk and Recorder's Office for Park County. Each permit shall contain such information deemed necessary or desirable by the County including, but not limited to, a standardized notice that the property for which the Conditional Use Permit is granted is located within the Mining Zone District for Park County, Colorado. Such permit shall place interested persons on notice that the Mining Zone District is, in part, intended to permit the extraction, transportation, processing and heavy industrial activities associated with the mining of mineral resources and that the property described in the permit may be subject to impacts related to such industrial and mining uses including, but not limited to noise, dust, vibration, truck and heavy equipment traffic, and that such impacts may be generated by properties in close proximity to the property described in the permit.

Section 5-312 Recreational Vehicle Park and Campground Zone District (RVC).

A. Purpose. The purpose of the Recreational Vehicle Park and Campground Zone District is to allow for the development of tourist serving campgrounds in locations consistent with the Park County Strategic Master Plan and with appropriate safeguards for the protection of campground users, the environment, Park County residents, and other visitors.

B. Special Note: The Recreational Vehicle Park and Campground Zone District (RVC) is intended for application only to properties with the following characteristics or qualities:

1. Sites shall be level and well drained, free from steep topographical or geological hazard or areas or other conditions unfavorable to proper enjoyment by users.

2. Adequate water supply and satisfactory means of sewage and trash disposal shall be basic considerations for any application for rezoning to or development within the RVC Zone District.

3. At least twenty-five percent (25%) of the gross land area within a Recreational Vehicle Park or a Commercial Campground shall be reserved for recreational and community use by the occupants of the park or campground.

4. Adequate accessibility to main roadways and services must be established to accommodate large recreational vehicles with limited turning movements, reduced visibility, and slower acceleration speeds to main roadways and services.

5. A Master Site Plan must accompany any application for rezoning to or development within the RVC Zone District.

C. Uses:

1. No tent, trailer, or other camping unit may be permanently affixed to the ground, or be occupied for more than six (6) months in any twelve (12) month period.

2. RVCs may include one (1) residential dwelling unit or camping unit for the purpose of providing housing or shelter for the caretaker or supervisor of a RVC.

3. Each RVC site must have an address post equipped with a numbered and color-coded sign indicator.

4. Each RVC site must include a designated and identifiable parking space of at least two hundred (200) square feet suitable for one (1) vehicle. The parking space must be constructed so that no portion of any vehicle extends onto any roadway within the RVC.

5. Road systems within a RVC are required. Road systems must be constructed to the standard described below. If a road system is for one-way traffic only, directional signs must be installed.

6. Access roads to RVCs must be sixteen (16) feet wide for one-way and twenty-four (24) feet wide for two-way traffic. The roads must be surfaced with granular material no greater than class 6 aggregate base course.

7. A RVC must contain at least one comfort station. The comfort station(s) shall meet the requirements of Table 5-312b based on the number of sites within the RVC. The comfort station(s) must be maintained primarily for the use of the RVC occupants.

8. The owner's water source must comply with local, state, and federal regulations.

9. A RVC may contain a convenience/general store.

TABLE 5-312
Schedule of Uses – Recreational Vehicle Park & Campground Zone District

Use See Article IV for Definitions	SPECIAL REGULATIONS	USE AUTHORIZED AS:		
		Permitted	Conditional (See Division 5 Article V)	Temporary (See Division 6 Article V)
Campground, Commercial		X		
Community / Central Water or Wastewater System	With Applicable Local, State & Federal Permits	X		
Community Center Associated with Commercial Campground or Recreational Vehicle Park		X		
Emergency Services Facility			X	
Fraternal Organization	See Definitions		X	
Recreational Vehicle Park		X		
Retail Store Associated with Recreational Vehicle Park or Commercial Campground		X		
Shooting Range, Indoor or Outdoor			X	
Telecommunications Facility	Special Use Permit Required. See Division 9 of Article V.			
Caretaker Dwelling	See Table Footnote 1	X		
Utility Facility, County or Minor		X		

TABLE 5-312a
New Lot Development Standards – Recreational Vehicle Park & Campground

Standards	Maximum	Minimum
Floor Area Per Unit – Caretaker Dwelling		N/A
*Structure Height	35 Feet	
Setbacks – Principal & Accessory Structures*		
Any Side From Any Watercourse		50 Feet
Any Side From Any Wetland		50 Feet
Front: Adjacent to State/Federal Highway		50 Feet
Front: Adjacent to All Other Roads		50 Feet
Between Structures and RV Spaces		20 Feet

*Each space may have one Accessory Structure of 120 square feet or less. Structures must meet applicable building codes.

Table Footnotes:

Other than one (1) Single Family Dwelling for a Caretaker or Operator, no Public or Private Campground or Recreational Vehicle Park shall permit full-time or permanent residential occupation of any campground, tent, camper, trailer, or recreational vehicle.

TABLE 5-312b
RVC Comfort Station

SITES	TOILETS		URINALS	LAVATORIES		SHOWERS	
	MALE	FEMALE	MALE	MALE	FEMALE	MALE	FEMALE
≤30	1	2	1	1	1	1	1
31-45	2	3	1	3	3	1	1
46-60	2	4	2	3	3	2	2
61-80	3	5	2	4	4	2	2
81-100	3	5	2	4	4	3	3
For every one hundred (100) additional sites in excess of one hundred (100) sites, one additional urinal and one (1) female toilet must be provided.							

Section 5-313 Planned Unit Development Zone District (PUD).

A. Purpose. The PUD Zone is established under the provisions and authority of the Planned Unit Development Act of 1972 (C.R.S. §§24-67-101 et seq.). A Planned Unit Development is defined as "an area of land, controlled by one or more landowners, to be developed under unified control or unified plan of development for a number of dwelling units, commercial, educational, recreational, light industrial uses, heavy industrial uses, or any combination of the foregoing, the plan for which does not correspond in lot size, or type of use, density, lot coverage, open space, or other restriction to the existing land use regulations." The purposes of this Section are:

1. To provide for necessary commercial, recreational, and educational and or housing facilities conveniently located within the PUD;

2. To provide for well-located, clean, safe, and pleasant light industrial sites involving a minimum of strain on transportation facilities;

3. To ensure that the provisions of the zoning laws, which direct the uniform treatment of dwelling type, density, and open space within each zoning district, will not be applied to the improvement of land in a manner which would distort the objectives of the zoning laws;

4. To encourage innovations in residential, commercial, light industrial, and renewal so that the growing demands of the population may be met by greater variety in type, design, and layout of buildings;

5. To encourage a more efficient use of land and of public services, or private services in lieu thereof, and to reflect changes in the technology of land development so that resulting economies may insure to the benefit of those who need homes;

6. To lessen the burden of traffic on streets and highways;

7. To conserve the value of the land;

8. To provide a procedure which can relate the type, design, and layout of residential, commercial, and industrial development to the particular site, thereby encouraging preservation of the site's natural characteristics; and

9. To encourage integrated planning in order to achieve the above purposes.

B. Special Notes:

1. The PUD Zone District is used to uniformly plan residential use of property with a mix of related or supporting recreational, commercial, light industrial, and/or heavy industrial uses. Applicants are strongly encouraged to review the Park County Strategic Master Plan when considering appropriate scale, location and composition of a PUD.

2. Each PUD must include a Park and/or Open Space plan for areas owned and controlled by an association or other arrangement accepted by the County. Such Park or Open Space shall be held and maintained in perpetuity for the use and enjoyment of the owners of lots within the PUD or the general public.

3. The PUD Zone District is intended to permit the owner(s) of the property proposed for development to create a program and a schedule for the logical and diligent development of the entire site prior to, or contemporaneously with, the sale and development of Lots. For this reason, the creation of the PUD must be accompanied by a Subdivision Improvement Agreement that mandates the coordinated and planned installation and completion of all public facilities to serve the development (including but not limited to

access, traffic control devices, streets, drainage improvements, and utilities), and which provides adequate safeguards by way of bonding, surety, or other financial guarantee, as approved by the Board of County Commissioners to ensure such performance.

4. The Board of County Commissioners having considered all recommendations of the Strategic Master Plan may approve a PUD Zone district when they find those proposals promote the health, safety and welfare of Park County.

5. The PUD is subject to the rezoning standards for approval as described in Article V, Division 2, Section 5-203.

C. General. A Planned Unit Development (PUD) is a zoning classification that replaces the requirements of the previous zone district where the property is located. Since every PUD is essentially a custom zone district, the PUD application must contain sufficient information to regulate all proposed structures and uses. These regulations should use those for existing zone districts (e.g. Residential, Commercial) as a guide to form but are not required to duplicate them. PUDs are approved in three steps. The first step requires the approval of a PUD Sketch Plan describing the general terms of the development. The second step involves the review and approval of a more detailed Preliminary PUD Plan and Plat for the development. The third step involves the simultaneous review and approval of a Rezoning to the PUD district and a Final PUD Plan and Plat for the development. Following final Plan and Plat approval, both documents shall be recorded with the County Clerk for future reference.

D. PUD Sketch Plan Section 6-403. A Sketch Plan is intended to allow early review of a proposed PUD before substantial planning work has been undertaken and before substantial expenses have been incurred. A Sketch Plan must cover all of the land area to be included in the PUD and identify the type and total amount of development to occur within the PUD (dwelling units and nonresidential floor area as well as the proposed plan for pedestrian and vehicular circulation within and leading to the PUD). If the PUD is to be developed in phases, a phasing plan must also be established as a part of the Sketch Plan.

1. Pre-application Meeting. Applicants shall schedule and attend a Pre-application Meeting before filing a PUD Sketch Plan application as described in Section 6-201.

2. Application Filing**.** Sketch Plan applications shall be submitted to the Planning Director/County designee pursuant to the requirements of Section 6-403. The Planning Director/County designee may waive requirements that are demonstrably irrelevant, or require other data or information essential to the evaluation to enable an adequate conceptual evaluation of the proposed subdivision.

3. Planning Director/County Designee's Review and Report. The Planning Director/County designee shall distribute referrals as described in Section 6-203, review each PUD Sketch Plan application in light of the Approval Criteria of this Section, and provide a staff report to the Planning Commission and Board of County Commissioners.

4. Public Hearing**.** PUD Sketch Plan applications shall be considered at a public hearing as described in Section 6-207. Any continuation of a hearing for a PUD Sketch Plan must be to a date certain and may not continue for more than forty days from the date of commencement without the written consent of the applicant.

   a. Planning Commission's Review and Recommendation. The Planning Commission shall recommend approval, approval with conditions, or denial of the application based upon the Approval Criteria of this Section. The Planning Commission shall forward its recommendations to the Board of County Commissioners, and may include a summary of its reasoning along with the recommendation.

b. Board of County Commissioner's Review and Decision. After receiving the recommendation of the Planning Commission, the Board of County Commissioners shall act to approve, approve with conditions, or deny the rezoning based on the approval criteria of this Section.

5. PUD Sketch Plan Approval Criteria. PUD Sketch Plans may be approved by the Board of County Commissioners only if they find that all of the following criteria have been met:

a. The proposed PUD substantially conforms to the goals and policies of the Park County Strategic Master Plan; and

b. Facilities and services (including but not limited to sewage and waste disposal, domestic water, gas, electricity, police and fire protection, and roads and transportation, as applicable) will be available to serve the subject property while maintaining adequate levels of service to existing development.

6. Finding of Fact. The decision of the Board of County Commissioners shall be accompanied by written findings of fact, which shall include a finding of whether the proposed Sketch Plan substantially conforms to the goals and policies of the Park County Strategic Master Plan and meets applicable requirements of the Land Use Regulations. Those written findings shall be filed with the Planning Office and the Clerk and Recorders of Park County. In the event of denial, the Board of County Commissioners written finding shall specify the provisions of the County's adopted regulations that the proposal failed to satisfy.

7. Effect of Sketch Plan Approval. The Sketch Plan shall enable and substantially govern the preparation of the required Preliminary PUD Plan and Plat.

8. Lapse of Sketch Plan Approval. An approved Sketch Plan shall lapse and be of no further force and effect if a complete Preliminary PUD Plan and Plat application for the PUD has not been submitted within two (2) years of the date of the Sketch Plan approval by the Board of County Commissioners. In the event that approval lapses, the Sketch Plan approval shall be of no effect, and the Planning Director/County designee shall record a lapse of approval affidavit with the Park County Clerk and Recorder. An applicant may apply to the Planning Director/County designee in writing prior to the expiration of such two (2) year period to request a one-year extension of the above deadline for good cause. The Planning Director/County designee shall forward such extension request to the Planning Commission for a recommendation, and to the Board of County Commissioners for a decision on such extension. Only one such extension shall be granted to any approved PUD Sketch Plan.

E. Preliminary PUD Plan and Plan Application. A Preliminary Plan and is intended to allow for detailed analysis and review of the overall design and proposed infrastructure for the PUD.

1. Pre-application Meeting. Applicants shall schedule and attend a Pre-application Meeting before filing a Preliminary PUD Plan and Plat application as described in Section 6-201.

2. Application Filing. Preliminary PUD Plan and Plat applications shall be submitted to the Planning Director/County designee pursuant to the requirements of Section 6-404 in order to allow for a thorough review of the proposal and its impacts. The Planning Director/County designee may waive requirements that are demonstrably irrelevant, or require other data or information essential to the evaluation of the proposed subdivision.

3. Planning Director/County Designee Review and Report. The Planning Director/County designee shall review each PUD Preliminary Plan and Plat application in light of the Approval Criteria of this Section and distribute the application to referral agencies as

described in Section 6-203. The Planning Director/County designee shall subsequently provide a report to the Planning Commission and the Board of County Commissioners.

4. Public Hearing. Preliminary PUD Plan and Plat applications shall be considered at a public hearing as described in Section 6-206. Any continuation of a hearing for a Preliminary PUD Plan and Plat must be to date certain and may no continue for more than forty days from the date of commencement without the written consent of the applicant.

   a. Planning Commission's Review and Recommendation. The Planning Commission shall recommend approval, approval with conditions, or denial of the application based upon the Approval Criteria of this Section. The Planning Commission shall forward its recommendations to the Board of County Commissioners, and may include a summary of its reasoning along with the recommendation.

   b. Board of County Commissioners Review and Decision. After receiving the recommendation of the Planning Commission, the Board of County Commissioners shall act to approve, approve with conditions, or deny the application based on the approval criteria of this Section.

5. Preliminary PUD Plan and Plat Approval Criteria. Preliminary PUD Plan and Plat applications may be approved by the Board of County Commissioners only if they find that all of the following criteria have been met:

   a. The Preliminary PUD Plan and Plat is consistent with the approved PUD Sketch Plan;

   b. The Preliminary PUD Plan and Plat complies with applicable requirements of these Land Use Regulations;

   c. Any proposed modification of any requirement of this Code substantially conforms to the goals and policies of the Park County Strategic Master Plan, and

   d. Facilities and services (including but not limited to sewage and waste disposal, domestic water, gas, electricity, police and fire protection, and roads and transportation, as applicable) will be available to serve the subject property while maintaining adequate levels of service to existing development.

6. Finding of Fact. The decision of the Board of County Commissioners shall be accompanied by written findings of fact. Those written findings shall be stated in the Board's resolution approving or denying of Preliminary PUD Plan and Plat. The findings shall also be filed with the Planning and Zoning Department and the Clerk and Recorder of Park County. In the event of denial, the Board of County Commissioners written finding shall specify the provisions of the County's adopted Land Use Regulations that the proposal failed to satisfy.

7. Effect of Preliminary PUD Plan and Plat Approval. The Preliminary PUD Plan and Plat shall enable and substantially govern the preparation of the required Final PUD Plan and Plat.

8. Lapse of Preliminary PUD Plan and Plat Approval. An approved Preliminary PUD Plan and Plat shall lapse and be of no further force and effect if a complete Final PUD Plan and Plat application for the PUD has not been submitted within two (2) years of the date of Preliminary PUD Plan and Plat approved by the Board of County Commissioners. In the Event that approval lapses, the Preliminary PUD Plan and Plat shall be of no effect, and the Planning Director/County designee shall record a lapse of approval affidavit with

the Park County Clerk and Recorder. An applicant may apply to the Planning Director/County designee in writing prior to the expiration of such two (2) year period to request a one-year extension of the above deadline for good cause. The Planning Director/County designee shall forward such extension request to the Planning Commission for a Recommendation, and to the Board of County Commissioners for a decision on such extension. Only one such extension shall be granted to any approved Preliminary PUD Plan and Plat.

F. Final PUD Plan and Plat and Rezoning. Final PUD Plan and Plat and Rezoning approval, in accordance with the procedures of this subsection, shall be required before the issuance of any permit for construction within the PUD district.

1. Pre-application Meeting. Applicants shall schedule and attend a pre-application meeting before filing a Final PUD Plan and Plat and Rezoning application as described in Section 6-201.

2. Application Filing. Final PUD Plan and Plat and Rezoning applications shall be submitted to the Planning Director/County designee pursuant to the requirements of Section 6-405. The Planning Director/County designee may require other data or information essential to the evaluation to enable an adequate evaluation of the proposed subdivision.

3. Planning Director/County Designee's Review and Report. The Planning Director/County designee shall review each PUD Final Plan and Plat and Rezoning application in light of the approval Criteria of this Section and shall distribute the application to other referral agencies. Based on those reviews, the Planning Director/County designee shall provide a report to the Planning Commission and the Board of County Commissioners.

4. Public Hearing. Final PUD Plan and Plat and Rezoning applications shall be considered at a public hearing as described in Section 6-206. Any continuation of a hearing for a final PUD Plan and Plat and Rezoning must be to a date certain and may not continue for more than forty days from the date of commencement without the written consent of the applicant.

5. Planning Commission's Review and Recommendation. Following the completion of the public hearing, the Planning Commission shall recommend approval, approval with conditions, or denial of the application based upon the Approval Criteria of this Section.

6. Board of County Commissioners Review and Decision. After receiving the recommendation of the Planning Commission, the Board of County Commissioners shall act to approve, approve with conditions, or deny the Final PUD Plan and Plat based on the approval criteria of this Section.

7. Final PUD Plan and Plat and Rezoning Approval Criteria. Final PUD and Plat and Rezoning applications shall be approved by the Board of County Commissioners only if they determine that the Final PUD Plan/Plat and Rezoning:

   a. Is consistent with the approved Preliminary PUD Plan and Plat;

   b. Substantially conforms to the goals and policies of the Park County Strategic Master Plan;

   c. Includes all revisions and conditions imposed by the Board of County Commissioners during their approval of the Preliminary PUD Plan and Plat;

   d. Has addressed all professionally identified concerns regarding potential wildlife impact, water quantity and quality, wastewater treatment, traffic, utilities, drainage, and geology;

e. Where public improvements are proposed, has had a subdivision improvement agreement approved to form and legality by the County Attorney and executed by the applicant in order to secure the timely and complete construction of the public improvements;

f. Will result in a substantial benefit to the County, compared to what could have been accomplished through strict application of otherwise applicable base zoning district standards;

g. Complies with the intent of the PUD zoning district as described in Section 5-313; and

h. Is in the best interest of the health, safety and welfare of County residents.

8. Findings of Fact. The decision of the Board of County Commissioners shall be accompanied by written findings of fact. Those written findings shall be stated in the Board's resolution approving or denying the Final PUD Plan and Plat. The findings shall also be filed with the Planning and Zoning Department and the Clerk and Recorders office of Park County. In the event of denial, the Board of County Commissioners written finding shall specify the provisions of the County's adopted Land Use Regulations that the proposal failed to satisfy.

9. Lapse of Final PUD Plan and Plat Approval. Unless otherwise expressly modified by an approved Subdivision Improvements Agreement or other agreement between the owner and the Board of County Commissioners, final approval or conditional approval of a Final Plat shall be valid for three (3) years following the date of plat recordation and, thereafter, during any period for which a legally recognized vested property right inures to the subdivision. If approval lapses, the Planning Director/County designee shall record a lapse of approval affidavit with the Park County Clerk and Recorder and initiate action to rezone the property to a zoning classification that is consistent with the Park County Strategic Master Plan, in accordance with the Rezoning procedure of Article V, Division 2, Section 5-200 to 5-204.

G. PUD Amendments. Proposed amendments to approved PUDs will be reviewed as either Major amendments or Minor amendments. Neither type of amendment can be used to extend the abovementioned three year term following Plat recordation.

1. Major Amendments. Major amendments are those that involve changes in types of uses, locations of uses, or density. Major amendments shall be processed as a resubmission of a Final PUD Plan and Plat. In addition to the other standards of approval for a Final Plan and Plat, they shall require a finding by the Board of County Commissioners that the amendment is consistent with the efficient development and preservation of the entire PUD.

2. Minor Amendments. Minor amendments are those that involve the adjustment of lot lines, utility easements, or building envelopes within lots and are judged by the Planning Director to not have substantial effects. The Planning Department shall process Minor amendments administratively.

Section 5-314 Mobile Home Park Zone District (MHP).

A. Purpose. The Purpose of the Mobile Home Park (MHP) Zone is to allow sites for the semi-permanent placement of single family mobile homes meeting applicable local, state or federal codes intended for residential occupancy and uses normal and appurtenant to those uses. The MHP zone allows only the leasing or renting of sites.

TABLE 5-314
Schedule of Uses – Mobile Home Park Zone District (MHP)

Use See Article IV for Definitions	SPECIAL REGULATIONS	USE AUTHORIZED AS:		
		Permitted	Conditional (See Division 5 Article V)	Temporary (See Division 6 Article V)
Caretaker Dwelling		X		
Community / Central Water or Wastewater System	With applicable local, state & federal permits	X		
Day Care, Commercial	With applicable local and/or state license(s)		X	
Day Care, Home	With applicable local and/or state license(s)	X		
Emergency Services Facility			X	
Fraternal Organization			X	
Home Occupation (Minor)		X		
Mobile Home Park		X		
Retail Store Associated with Mobile Home Park		X		
Telecommunication Facility	Special Use Permit required. See Division 9 of Article V.			

B. Development Standards:

1. Site Layout

a. Access. Each mobile home space shall abut on a driveway with unobstructed access to a public or private road.

b. Spacing. Mobile homes and associated accessory structures shall be a minimum of twenty (20) feet apart

c. Setback. All mobile home spaces shall be thirty (30) feet from any exterior boundary of the Mobile Home Park.

d. Mobile Home Space. All mobile homes shall be situated on a designated mobile home space except when stored according to Section 5-314 B 3.

2. Improvements

a. Base and Tie Down. Mobile home spaces shall be improved to provide a base for the adequate support, placement and tie down of mobile homes.

b. Access and Public Roads. The park shall have direct access to a public right of way at least sixty (60) feet in width. Service roads shall be provided to each mobile home space. Each service road shall have a minimum traveled surface width of twenty (20) feet.

c. Walkways. Walkways, if provided, shall be at least thirty (30) inches wide.

d. Accessory Structures. Each space may have one accessory structure of no more than 120 square feet.

e. Lighting. Refer to Use Regulations Article V Section 5-709.

3. Parking

a. Trucks and Automobiles. Parking spaces shall be provided for each developed pad. On street parking is prohibited.

b. Other. At least one (1) parking space shall be provided for each five (5) developed lots to accommodate motorboats, recreational vehicles, motorcycles, trailers and snowmobiles. This area shall be fenced and located within park boundaries. It shall be designed to allow temporary storage of vacant mobile homes; however, not more than five (5) mobile homes may be stored at any one time.

4. Open Space. At least twenty-five percent (25%) of the total park areas shall be dedicated to usable open space.

5. Fire Protection. Each mobile home park shall be equipped at all times with fire extinguishing equipment as required by the local fire prevention authority, or to satisfy other regulations.

6. Service Building. Service buildings shall meet applicable local and state regulations.

7. Utilities. Each mobile home space shall have water, sewer, and electrical connections.

8. Gas Fuel and Oil. Mobile homes using liquefied petroleum gas for cooking and heating shall be subject to inspection for compliance.

9. Solid Waste Storage. Solid waste shall be stored in an enclosed building or in bear-resistant containers.

DIVISION 4 OVERLAY AREAS

Section 5-400 Rural Center Overlay Areas.

A. Conformance with Strategic Master Plan Intended. In accordance with the Park County Strategic Master Plan, "Rural Centers" are intended to accommodate growth that provides more intensive land uses than those in more rural areas of Park County.

B. Rural Centers Created. There are hereby created the following "Rural Centers" within Park County as defined and illustrated on the maps attached to these Land Use Regulations as Appendix I.

Bailey	Guffey	Lake George
Como	Hartsel	Pine Junction
Crow Hill	Jefferson	

C. Purpose. The identification of Rural Centers is intended to facilitate the implementation of the following goals and guiding principles of the Park County Strategic Master Plan:

1. Direct new smaller-lot residential and commercial / light industrial development to existing communities and rural centers. To the extent necessary, expand these boundaries to accommodate this growth. (*Strategic Master Plan,* Goal4)

2. Target new residential uses at or greater than one (1) unit per five (5) acres to areas contiguous to existing Rural Centers in order to facilitate infrastructure and the services required by denser residential development. (*Strategic Master Plan,* Guiding Principle VI.C1)

3. Maintain the traditional rural, small-town development patterns and rural character of the county. (*Strategic Master Plan,* Guiding Principle VI.C.2*)*

4. Target the location of new commercial development to existing Rural Centers, except where the specific use requires a more remote location, such as guest ranches, and fishing and hunting outfitters. Locate commercial uses near or adjacent to other similar uses. (*Strategic Master Plan*, Guiding Principle VI.D.1)

5. Target the location of new light industrial development to existing Rural Centers, except where the specific use requires a more remote location, such as mining and resource extraction industries and utilities. Locate industrial uses near or adjacent to other similar uses. (*Strategic Master Plan,* Guiding Principle VI.D.2)

Section 5-401 Cluster Development.

A. Purpose. In accordance with the provisions of Section 30-28-401 et seq., C.R.S., and the Park County Strategic Master Plan, the opportunity for cluster subdivision is available to protect from development lands deemed sensitive or of value to the health, safety and welfare such as, wildlife habitat, wetlands, watercourses, agricultural areas and other such lands deemed appropriate for preservation by the Board of County Commissioners.

B. Cluster Development Procedures. Property proposed for subdivision shall be eligible for inclusion within the cluster development under the following criteria or conditions.

1. Subdivision Application Required. The owner must apply for a Major or Minor Subdivision that will divide the property into lots with a net density of no more than one residential unit per seventeen and one half acres, preserve at least two thirds of the subject property from development, and identify the areas of preserved lands in accordance with this section.

2. Property Designated For Permanent Preservation. The owner must designate by subdivision plat the property to be preserved from development. Such property shall meet the following criteria:

   a. Lands must comprise, but not be limited to, wildlife habitat, foraging areas, migration corridors, wetlands, significant riparian areas, endangered plant species, productive agricultural areas or areas reasonably capable of agricultural productivity, prominent ridgelines; or other land with similar natural resource values. The propriety or suitability of the lands designated for preservation shall be subject to the discretion of the Board of County Commissioners;

   b. Lands must be permanently preserved or reserved from development by means deemed acceptable to the Board of County Commissioners, such means to include a Conservation Easement[7] or by a dedication or donation acceptable by the Board of County Commissioners. All preserved land, and the purpose for such preservation shall be expressly and specifically identified on the recorded subdivision plat for the property. It is encouraged that the ownership of the preserved land be conveyed separate from ownership of the developed lots or the homeowners association and that use of the preserved lands, in a manner appropriate for the area, be promoted (i.e. Ranching, grazing, harvesting of forest products, recreational activities, and similar uses).

   c. When appropriate, applicants shall be encouraged to designate lands for permanent preservation that are contiguous with adjacent preserved lands and/or open space.

[7] See Article IV, Definitions, “Conservation Easement”

DIVISION 5 CONDITIONAL USE PERMITS

Section 5-500 Conditional Uses Generally

A Conditional Use is a use of land that may be found generally compatible with the permitted uses in a zone district, but which requires site-specific review of the use location, design, intensity, density, configuration and operating characteristics, and which may require the imposition of appropriate conditions in order to ensure compatibility of the use at a particular location, and mitigate its potentially adverse impacts. There is no presumption that a Conditional Use is compatible with other uses in the zone district or that such use must be approved in every instance for the zone district in which it is permitted. A use identified as a Conditional Use in a particular district shall be permitted in such district and upon specific property only upon approval of a Conditional Use Permit by the Board of County Commissioners in accordance with the procedures and standards of this Division. Approval of a Conditional Use Permit shall not be construed as an amendment of the Official Zoning Map, but shall be a permit the continuation of which shall be conditioned upon full conformance of these Land Use Regulations and the conditions imposed upon such permit.

Section 5-501 Application for Conditional Use Permit.

Contents. All applications for a Conditional Use Permit shall be made on forms prepared by and available from the Planning Department and shall contain the following information:

A. A completed application in the form approved by the Director;

B. Payment of all required application fees and any review fee deposit;

C. Evidence that property taxes have been paid current;

D. Evidence of Ownership and Encumbrances as defined by Article IV of these Land Use Regulations;

E. Submit a copy of all recorded covenants, which apply to the subject property.

F. A complete legal description of the property proposed for the Conditional Use Permit prepared by a licensed registered Colorado land surveyor (In most cases, a copy of the legal description contained in the deed will suffice);

G. A list of the names and mailing addresses, as this information appears of record with the Park County Assessor's Office, of all owners of Adjacent Property[8] to the property proposed for Conditional Use Permit;

H. A signed and notarized certification from the Applicant that proper notice has been provided to the mineral estate owner pursuant to and in accordance with Colorado Revised Statutes §24-65.5-103, or a certification that such notice is not required because the surface estate has not been separated from the mineral estate for the property described in the application. A form of certification is provided in Appendix B.

I. Current Conditions Map including, in one or more mapped or graphic formats, the following information:

   1. Topography of the property shown in elevation contours of not greater than twenty (20) or forty (40) foot increments unless otherwise stated by the Planning Director/County designee. Applicants are encouraged to use the USGS topographic mapping or other form of commercially produced topographic map.

[8] See Article IV, Definitions, "Adjacent Property"

2. Points of access to the property, internal roads, and trails including widths, approximate grades. The Current Conditions Map must illustrate how access is obtained from the property subject to the Conditional Use Permit application to the nearest road or highway.

3. Where any access to the property subject to the Conditional Use Permit application is obtained from a road, trail easement, driveway, historic use, or other private right of access other than County owned right-of-way, the applicant shall provide evidence of permanent legal right of access. Such evidence may include, but not be limited to, deed, easement agreement, or attorney opinion of legal right of access.

4. Natural features of the property subject to the Conditional Use Permit application including: wetlands, riparian areas, and water bodies (e.g. lakes, ponds, streams, whether continuous or seasonal) and slopes greater than thirty percent (30%).

5. Structures on the property subject to the Conditional Use Permit.

6. Utility systems including existing and proposed water wells, sewer systems, electric services, and natural gas.

J. Proposed Development Plan describing in mapped form and/or graphic form existing and proposed physical improvements of the property and approximate locations.

K. If the proposed Conditional Use pertains to property located in a geological hazard area according to the geological hazard map, then the application must contain a geo-technical report prepared by a qualified professional geologist addressing the presence and extent of any geological hazards, including, but not limited to, underground excavations on/or adjacent to the subject property and radioactive or toxic materials and/or minerals.

L. Applicant shall supply a specific master site plan.

Section 5-502 Procedure for Conditional Use Permit Review.

A. Planning Director/County Designee's Completeness Determination. All applications for Conditional Use Permit shall be delivered to the Planning Director/County designee. No application shall be processed or scheduled for processing before the Planning Commission or the Board of County Commissioners unless the Director deems the application complete and all required information and documentation is submitted to the Director.

B. Planning Commission Review. Prior of any proposed Conditional Use Permit, the application shall be submitted to the Planning Commission for review and consideration.
For purpose of this section, the "date of submission" shall be the date of the presentation of the draft resolution to the Commission at a regular or special meeting of the Commission. The Planning Commission's review of the application shall be conducted at a public hearing with notice provided in accordance with Section 5-502. Following the date of submission of the application to the Planning commission, the Commission shall make a reasonable effort to deliver a recommendation to the BOCC in a timely manner. The Planning commission's failure to render its approval, disapproval, or provide any recommendation within ninety (90) days of submission may be deemed by the BOCC as approval of the proposed Conditional Use Permit by the Planning Commission.

C. Board of County Commissioners Public Hearing. Before final approval of a proposed Conditional Use Permit, the Board of County Commissioners shall hold a public hearing on the application. Notice of the public hearing shall be provided as follows:

1. Content of Notice. The notice of pubic hearing shall include the date, time, place, the general purpose of the hearing (e.g., type of application), and a general description of the property affected. The general description; may be stated by: (a) a metes and bounds

description the boundaries of which include the property subject to the proposed Conditional Use Permit; or (b) by lot and block of a recorded subdivision plat; or (c) by a reference to intersecting roads, compass direction relating the property to the intersection, and a statement of the approximate acreage involved. The Planning Department may include other information deemed appropriate by the Department to apprise the public of the general nature of the action proposed.

2. Form of Notice.

a. Required Notice. Notice of public hearing for the application for a Conditional Use Permit shall be published in the official County newspaper or in a newspaper of general circulation within Park County at least fourteen (14) days before the date of the hearing.

b. Additional Notice. The County shall provide additional notice of the proposed application and hearing by mailing and posting in accordance with this section.

i Mailing. A notice by mail should be deposited in the United States Mail; first class postage prepaid or shall be delivered by another comparable service, including hand-delivery to the address. The deposit in the U.S. Mail or delivery to another comparable service should be made at least fourteen (14) days before the date of the hearing. Failure of the addressee to receive notice shall not be deemed sufficient cause to require a postponement, re-mailing of notice, or invalidation of the hearing. Mailed notice shall be addressed to owners of Adjacent Property[9] as their names appear in the real property records of the Park County Assessor or Park County Clerk and Recorder. For purposes of determining addresses for mailed notice, the County may rely upon the ownership information provided by the Applicant as part of the application.

ii Posting. A notice by posting shall be made by the Planning Department's posting of a sign approved by the Planning Director/County designee on or reasonably near the property that is subject to the hearing in a location that is reasonably determined by the County to provide the greatest degree of visibility to members of the public. In most instances, the posting shall be made along the primary traveled public right-of-way adjacent to or leading to the property. Posting should be initially made at least fourteen (14) days before the date of the hearing. At the outset of each hearing, the Planning Department should provide evidence of posting in accordance with this section to the Planning Commission or the Board of County Commissioners, as appropriate. Such evidence should be in the form of photographs showing the posted sign or other document evidencing the time, date, and location of the posting.

iii Referral Agency Notice. A notice may, at the County's election, be deposited in the United States Mail; first class postage prepaid or shall be delivered by another comparable service, including hand-delivery to the address of any Referral Agency identified in 6-203 (B) or (C). Failure of the addressee to receive such notice shall not be deemed sufficient cause to require a postponement, re-mailing of notice, or invalidation of the hearing.

[9] See Article IV, Definitions, "Adjacent Property"

Section 5-503 Standards for Approval of Conditional Use Permit.

In considering any application for Conditional Use Permit, the following standard shall govern. The applicant for the proposed permit shall bear the burden of proof and the resolution approving the application shall be approved and adopted only if it appears by clear and convincing evidence presented during the public hearing that the following conditions or circumstances exist:

A. The use proposed is an authorized Conditional Use for the zone district in which the property described in the application is located; and

B. The property described in the application for Conditional Use Permit possesses geological, physical, and other environmental conditions that are compatible with the proposed Conditional Use; and

C. The Conditional Use will conform with all applicable requirements of the zone district and these Land Use Regulations and do not create a substantial safety concern for anticipated visitors to the property; and

D. The property has a reasonably certain right of permanent legal access permitting vehicular access from the property to the public thoroughfare; and

E. Access to the property from the public thoroughfare reasonably meets County street, road, or driveway standards or, if the property is undeveloped, such access will be established prior to issuance of a building permit; and

F. The proposed Conditional Use is compatible with the uses and zoning for other properties within the neighborhood or immediately surrounding area; and

G. In making this determination, conflicts with any enforceable covenants, conditions and restrictions of record shall be considered.

Section 5-504 Form of Approval of Conditional Use Permit.

A Conditional Use Permit shall be issued only upon approval of a written resolution of the Board of County Commissioners. Each resolution shall set forth the specific conditions imposed upon the Conditional Use Permit. Unless the resolution approving a Conditional Use Permit states that the Permit is limited in its duration or will expire upon a specified event, a Conditional Use Permit shall be deemed perpetual and shall run with the property described in the Permit. The Conditional Use Permit shall be recorded against the property subject to the Permit.

Section 5-505 Conditions Authorized.

A. Conditions Authorized. The Board of County Commissioners may impose reasonable conditions on the approval of any Conditional Use Permit where such conditions are necessary to ensure the continuing use of the property in conformance with the requirements of the zoning district and the requirements of these Land Use Regulations or if such condition is necessary in order to ensure that the proposed amendment will satisfy the criteria for approval required by this Division.

B. Limitation on Duration of Permit Permitted. The Board of County Commissioners shall determine the duration of the Conditional Use Permit. Unless otherwise stated, Conditional Use Permit shall run with the subject property for the benefit of subsequent property owners. The provision and conditions of each Conditional Use Permit shall be recorded in the real property records of the Park County Clerk and Recorder.

1. Where the Board of County Commissioners finds that there is a substantial probability that the Conditional Use Permit will create impacts that are unreasonably uncertain or not

capable of identification at the time of the issuance of the Conditional Use Permit, the Board of County Commissioners may impose a limitation on the duration of the Permit.

2. Prior to the expiration of the Conditional Use Permit, the Board of County Commissioners shall review the applicant's situation and make a finding that either the Conditional Use Permit shall be (1) perpetual, (2) the Conditional Use Permit is terminated, or (3) the Conditional Use Permit shall be renewed for a set time.

C. Standard Conditions of Every Permit. Regardless of the form or content of the Resolution approving a Conditional Use, the following conditions shall be imposed upon every Conditional Use approved on or after the date of adoption of these Land Use Regulation.

1. The Conditional Use Permit shall be a license or permit which may be revoked in accordance with Section 5-506 of these Land Use Regulations.

2. The Conditional Use authorized by the Permit cannot be expanded in scope, area, use, or in any manner inconsistent with the Permit.

3. The Conditional Use Permit may be transferred to subsequent property owners provided the proposed transferee applies to the Planning Director for such transfer. The Planning Director may deny the transfer of the Conditional Use Permit for non-compliance with any/all of its conditions.

Section 5-506 Revocation of Conditional Use Permit.

A. Any Conditional Use Permit may be revoked at any time by the Board of County Commissioners upon a finding that:

1. The Conditional Use has failed to satisfy or conform with one or more express conditions of the Conditional Use Permit; or

2. The Conditional Use described in the application was not commenced within two (2) years of the date of the BOCC's approval; or

3. The Conditional Use was terminated, ceased, or otherwise discontinued operation as approved for a period of two (2) consecutive years.

B. Prior to revocation of a Conditional Use Permit, the Board of County Commissioners shall provide the owner of the property subject to the Conditional Use Permit notice and an opportunity to be heard regarding the cause(s) for revocation. Notice of such hearing shall be provided by the County in accordance with Section 5-502 (C)(2)(a). Any decision of the BOCC regarding revocation of a Conditional Use Permit shall be made in writing and shall be subject to appeal in accordance with Colorado Rules of Civil Procedure 106(a)(4). The Board of County Commissioner's decision to revoke a Conditional Use Permit shall be recorded with Clerk and Recorder following the expiration of any right to appeal or, if an appeal is timely filed, upon a conclusion of the appeal, which supports the Board of County Commissioner's decision to revoke the Permit.

C. The Board of County Commissioners may impose against any owner or holder of a Conditional Use Permit the reasonable costs incurred by the County in the enforcement and revocation of the Conditional Use Permit.

D. Upon order of the Board of County Commissioners to revoke a Conditional Use, the owner or holder of the revoked Conditional Use Permit shall remove and cease the Conditional Use within thirty (30) days of the date of the order or such other time as the Board shall establish at the time or revocation. It shall be unlawful for the owner or holder of a Conditional Use Permit to fail to timely remove and crease a Conditional Use as order following revocation and such failure shall

be subject to such penalties provided by Colorado Revised Statutes §30-28-124 (criminal penalties), as amended, provided that the minimum penalty shall be one hundred dollars ($100.00) for each day during which such failure and illegal use of property continues and is found to exist or have existed.

E. Upon order of the Board of County Commissioners to revoke a Conditional Use, the owner or holder of the revoked Conditional Use Permit shall remove and cease the Conditional Use within thirty (30) days of the date of the order or such other time as the Board shall establish at the time or revocation. It shall be unlawful for the owner or holder of a Conditional Use Permit to tail to timely remove and cease a Conditional Use as order following revocation and such failure shall be subject to such penalties provided by Colorado Revised Statutes §30-28-124.5 (civil penalties), as amended, provided that the minimum, penalty shall be five hundred dollars ($500.00) for each day during which such failure and illegal use of property continues and is found to exist or have existed.

Section 5-507 Amendment of a Conditional Use Permit.

The alteration, change, or modification of a Conditional Use shall require submission of an application for amendment of Conditional Use Permit and shall be processed in accordance with the application requirements and procedures for issuance of a new Conditional Use Permit as provided by this Division.

Section 5-508 Compliance with Conditions Required.

A. Any person, firm, or corporation violating any condition imposed upon a Conditional Use Permit shall be subject to such penalties provided by Colorado Revised Statutes §30-28- 124 (criminal Penalties), as amended, provided that the minimum penalty shall be one hundred dollars ($100.00) for each day during which such illegal use of property continues and is found to exist or have existed.

B. Any person, firm, or corporation violating any condition imposed upon a Conditional Use Permit shall be subject to such penalties provided by Colorado Revised Statutes §30-28- 124.5 (civil penalties), as amended, provided that the minimum penalty shall be five hundred dollars ($500.00) for each day during which such unlawful use of property continues and is found to exist or have existed.

Section 5-509 Required Standards for a Conditional Use Permit for Sexually Oriented Business

In considering any application for a Conditional Use Permit for Sexually Oriented Businesses, the following shall govern:

A. Outside Signage. No sexually explicit language or graphic representation.

B. Adult Entertainment. Shall only be allowed in a Commercial Zone District and will require a Conditional Use Permit.

C. Adult Entertainment Use. Shall not operate within fifteen hundred (1500) feet from any of the following pre-existing uses: a single family residence, a multi-family residence, a duplex residence, a school or a religious structure.

1. Operating hours. Adult entertainment uses shall be open only from the hours of 6:00 PM to 1:00 AM, except that an adult bookstore is not required to limit its operating hours.

2. Age limitation. No one under twenty-one (21) years of age shall be admitted to any establishment providing an adult entertainment use. This minimum age limitation also applies to any employees, agents, servants or independent contractors working on the premises during hours when nude entertainment is being presented.

3. School defined. For purpose of this section, “school” means any private or public educational institution primarily providing instruction to students eighteen (18) years of age and younger, including, but not limited to pre-schools, kindergartens, elementary, middle and high schools.

D. Adult Arcade. An establishment where, for any form of consideration, one or more still or motion picture projectors, slide projectors, or similar machines, or other image producing machines, for viewing by five or fewer persons each, are used to show films, motion pictures, video cassettes, slides, or other photographic reproductions which are characterized by the depiction or description of “specified sexual activities” or “specified anatomical areas”.

E. Adult Bookstore, Adult Novelty Store, or Adult Video Store.

1. A commercial establishment which:

a. Devotes a significant or substantial portion of its stock-in-trade or interior floor space to;

b. Receives a significant or substantial portion of its revenues from; or

c. Devotes a significant or substantial portion of its advertising expenditures to the promotion of the sale, rental or viewing (for any form of consideration) of books, magazines, periodicals or other printed matter, or photographs, films, motion pictures, video cassettes, slides, or other visual representations which are characterized by the depiction or description of “specified sexual activities” or “specified anatomical areas”.

2. An establishment may have other principal business purposes that do not involve the offering for sale, rental, or viewing of materials depicting or describing “specified sexual activities” or “specified anatomical areas”, and still be categorized as an adult bookstore, adult novelty store, or an adult video store. Such other business purposes will not serve to exempt such establishment form being categorized as an adult bookstore, adult novelty store or adult video store as long as the provisions of subsection (1) are otherwise met.

F. Adult Cabaret. A nightclub, bar restaurant or other commercial establishment, which regularly features: 1. Persons who appear nude or in a state of nudity; or 2. Live performances, which are characterized by the exposure of “specified anatomical areas” or by “specified sexual activities”.

G. Adult Motel. A motel, hotel or similar commercial establishment which:

1. Offers public accommodations, for any form of consideration, and provides patrons with closed-circuit television transmissions, films, motion pictures, video cassettes, slides or other photographic reproductions which are characterized by the depiction or description of “specified sexual activities” or “specified anatomical areas” and which advertises the availability of this sexually oriented type of material by means of a sign visible from the public right-of-way, or by means of any off-premises advertising including, but limited to, newspapers, magazines, pamphlets or leaflets, radio or television; or

2. Offers a sleeping room for rent for a period of time less than ten (10) hours; or

3. Allows a tenant or occupant to sub-rent a sleeping room for a time period of less than ten (10) hours.

H. Adult Motion Picture Theater. A commercial establishment where films, motion pictures, video cassettes, slides or similar photographic reproductions depicting or describing “specified sexual activities” or “specified anatomical areas” are regularly shown for any form of consideration.

I. Adult Theater. A theater, concert hall, auditorium, or similar commercial establishment which, for any form of consideration, regularly features persons who appear in a state of nudity or live performances which are characterized by exposure of “specified anatomical areas’ or by “specified sexual activities”.

J. Nudity or State of Nudity.

1. The appearance of the human bare buttock, anus, male genitals, female genitals, or the areola or nipple of the female breast; or

2. A state of dress which fails to opaquely and fully cover a human buttock anus, male or female genitals, pubic region, or areola or nipple of the female breast.

K. Nude model studio. Any place where a person, who appears in a state of nudity or displays “specified anatomical areas” is provided for money or any form of consideration to be observed, sketched, drawn, painted, sculpted, photographed, or similarly depicted by other means. The definition of “nude model studio” does not apply to:

1. A college, junior college, or university supported entirely or partly by taxation; or

2. A private college or university which maintains and operates educational programs in which credits are transferable to a college, junior college, or university supported entirely or partly by taxation; or

3. A business located in a structure which has no sign visible from the exterior of the structure and no other advertising that indicates a nude person is available for viewing; and where, in order to participate in a class a student must enroll at least three (3) days in advance of the class; and where no more than one (1) nude model is on the premises at any one time.

L. Sexual Encounter Establishment. A business or commercial establishment, that as one of its primary business purposes, offers, for any form of consideration, a place where two (2) or more persons may congregate, associate, or consort for the purpose of “specified sexual activities” or the exposure of “specified anatomical areas” or activities when one (1) or more of the persons is in a state of nudity. An adult motel will be classified as a sexual encounter establishment by virtue of the fact that it offers private rooms for rent.

DIVISION 6 TEMPORARY USE PERMITS

Section 5-600 Temporary Use Permits

A Temporary Use is a use of land limited in duration and generally compatible with the permitted uses in a zone district, but which also requires site-specific review to ensure compatibility. Temporary Uses may require the imposition of conditions not only on the duration of the use but also on other characteristics such as the location, configuration, and operation of the use to ensure compatibility.

Section 5-601 Procedures for Temporary Use Permit Review.

A. Pre-Application Meeting and Administrative Decision on Review. Before submitting an application, the applicant shall meet with the Planning Director or designee to review a written description of the proposed Temporary Use. Within ten days of this meeting, the Planning Director shall give the applicant a written administrative decision as to whether the application shall be processed administratively or shall be given public notice, sent to referral agencies, and heard by the Planning Commission and Board of County Commissioners.

B. Application Submission and Completeness Determination. Once the Planning Director or designee determines that a complete application as described in Section 5-602 has been submitted, he or she shall act as follows:

1. If the application is to be reviewed administratively, the Planning Director or designee shall review the application for compliance with the standards in Section 5-603 and give the applicant a written decision approving or denying the Temporary Use and stating the permitted duration of the use along with any other conditions necessary to ensure compliance with the standards of approval in Section 5-603.

2. If the application requires quasi-judicial review, the Planning Director or designee shall place the application as an item on the next Planning Commission agenda that will meet notice requirements outlined in Section 5-202. The Planning Commission shall consider the application in light of the standards in Section 5-603 and, upon finishing deliberation, provide the Board of County Commissioners with a resolution recommending approval or denial of the application. The Planning Commission may also recommend conditions necessary to ensure compliance with the standards of approval in Section 5-603.

Section 5-602 Temporary Use Application Requirements

A. Applicability. The following requirements apply to all Temporary Use applications regardless of their review method. The Planning Director may waive requirements that, due to the specific nature of the proposed use, are irrelevant to the standards in Section 5-603.

B. Contents. All applications for a Temporary Use Permit shall be made on forms prepared by the Planning Department and shall contain the following information:

1. Payment of the application fee and any deposit required by the County to ensure site restoration;

2. Evidence of Ownership and Encumbrances as defined by Article IV of these Land Use Regulations;

3. A list of the names and mailing addresses of owners of Adjacent Property;

4. A written description of the intent, operation, and duration of the proposed Temporary Use;

5. One or more maps containing the following information:

a. Points of access from public rights-of-way to the property and internal accesses including width and approximate grades;

b. Natural features of the property including wetlands, water bodies, and slopes greater than thirty percent;

c. Existing structures;

d. The physical layout of all elements of the proposed Temporary Use;

6. Any other information deemed necessary by the Planning Director to ensure compliance with the standards for approval of a Temporary Use or other applicable requirements.

Section 5-603 Standards for Approval of a Temporary Use Permit

In considering any application for a Temporary Use Permit, the following standards shall be applied. The applicant shall bear the burden of proof of these and the resolution or administrative decision approving the application shall be issued only if it appears by clear and convincing evidence that the following conditions or circumstances exist.

A. The subject property has physical characteristics that are compatible with the proposed Temporary Use; and

B. The Temporary Use will comply with all applicable requirements of these Land Use Regulations and all applicable requirements of other governmental agencies;

C. Proposed access to the property from public rights-of-way is sufficient to accommodate anticipated traffic and emergency vehicles;

D. The temporary use is compatible with permitted or existing uses in the immediate area; and

E. Where the owner, applicant, or affiliated person has previously conducted the proposed Temporary Use or a substantially similar Temporary Use, the use was conducted in accordance with federal, state, and County requirements.

Section 5-604 Conditions on Approval of a Temporary Use Permit

The Planning Director or designee or Board of County Commissioners may impose reasonable conditions on the approval of any Temporary Use Permit where such conditions are necessary to ensure the continuing use of the property in conformance with these Land Use Regulations or the requirements of other government agencies.

Section 5-605 Revocation of Temporary Use Permit

A. The Planning Director may revoke any Temporary Use Permit by an administrative decision finding that:

1. The Temporary Use has failed to comply with any condition of the Temporary Use Permit and the applicant has not remedied the failure immediately following notification by the County; or

2. The Temporary Use has failed to comply with any federal, state, or local law and the applicant has not remedied the failure immediately following notification by the County.

B. No hearing is required prior to revocation of a Temporary Use Permit. An administrative decision revoking a Temporary Use Permit may be appealed to the Board of County Commissioners as described in Article III, Division 2.

DIVISION 7 USE REGULATIONS

Section 5-700 Generally.

Certain principal uses, accessory uses, conditional uses, temporary uses, and other aspects of the use of property within zone districts of Park County must be conducted in accordance with specific criteria in order that such use be deemed as an allowed or lawful use in the zone district. The criteria of this Division shall apply to the uses specified. Deviation from or failure to comply with the criteria shall constitute a violation of these Land Use Regulations.

Section 5-701 Animal Regulations.

A. General Regulations. The following requirements apply to all uses of land involving Large Livestock, Small Livestock, or Domesticated Animals in any zone district.

1. All corrals, stalls, and barns shall be located at least fifty feet from any dwelling and one hundred feet from any water well or watercourse.

2. All corrals, stalls, and barns shall be routinely cleared of organic waste in all zone districts except that such waste shall be removed from residential (R) zoned lots when the amount of waste is equivalent to filling a five (5) cubic yard container unless used for composting as permitted below

3. Runoff containing organic waste shall not be allowed to drain onto adjacent lots or any watercourse.

4. Lot owners should check with the division of water resources to see if their well permit allows for watering of livestock.

5. The following definitions apply to phrases used in this section.

A. **Composting:** Processing waste in a controlled environment to produce a stable product by microbiologically degrading organic matter under aerobic conditions, i.e. container & open composting.

B. **Domesticated Animal:** A small animal customarily considered as a pet animal and permitted to be kept in a residential dwelling for company or pleasure, including, but not limited to, dogs, cats, pot-bellied pigs, gerbils, guinea pigs and similar rodents, provided that such animals are not kept to constitute a source of food, resource, or for any commercial purpose.

C. **Equine Animal:** Horses, donkeys, mules, and other animals within the genus *equus*.

D. **Livestock, Large:** Equine animal, bovine animal, sheep, goat, swine, reindeer, llama, ostrich, emu, yak, cattalo, and other hoofed animals customarily raised or kept on farms and ranches for profit or other productive purposes.

E. **Livestock, Small:** Mink (and other similar fur bearing mammals), duck, chicken and other poultry or fowl, and other animals of similar size customarily raised or kept on farms and ranches for profit or other productive purposes as opposed to Domesticated Animals.

F. **Livestock Unit:** One mature and one nursing animal.

B. Agricultural (A) Zone District. Provided that the General Regulations on the keeping of animals is complied with, there is no limit on the number of Large Livestock, Small Livestock, or Domesticated Animals that may be kept in the Agricultural Zone District. Concentrated Animal Feed Operations are a Conditional Use. Manure may be used for container composting on all lots and for open composting on lots larger than twenty acres.

C. Agricultural Small Lot (A-35), Residential Estate (R-35), and Residential Estate (R-20) Zone Districts.

1. The number of Large and Small Livestock permitted on a lot is derived from the following two tables:

TABLE A	
Livestock Unit Base Table	
Cow	1
Cattalo	1
EQUINE ANIMAL	4
Elk	1
Fallow Deer	5
Llama	3
Swine	2
Ostriches	4
Emus	4
Alpacas	3
Sheep	4
Goats	5
SMALL LIVESTOCK	25
Yak	4

TABLE B	
Zone Districts	
Residential Estate (R-20)	10-20 acres: 2
	21-40 acres: 4
Residential Ranch (R-35) AND AGRICULTURAL SMALL LOT (A-35)	35-70 acres: 4
	71-140 acres: 5
	141-159 acres: 6

Multiply the number in the Table A, the livestock unit base table by the appropriate number in Table B, the zone district table to arrive at the maximum number of animals of a particular type. A lot may contain more than one type of animal. For example, a 20 acre lot in the residential estate (R-20) zone district could have two cow livestock units, two cattalo livestock units, etc. The maximum number for any particular type of animal may be exceeded by approval of a Conditional Use Permit by the Board of County Commissioners. Manure may be used for container composting on all lots and for open composting on lots larger than twenty acres.

2. Each lot in the A-35, R-35, and R-20 zone districts may have no more than ten Domesticated Animals.

D. Residential (R) Zone District.

1. Equine, Llama, Alpaca, Goat, Sheep and 4-H project animals may be kept on lots over one acre, with one animal for each 20,000 square feet of space not containing a structure and a maximum of four animals.

2. Each lot may have ten Small Livestock animals for each acre of open space.

3. Lots smaller than ten acres may have up to six Domesticated Animals. Lots that are ten acres or more may have up to ten Domesticated Animals.

E. Mountain Residential (MR) Zone District.

1. See the Mountain Residential regulations in Article V Division 3 for the keeping of Large Livestock.

2. Each lot may have ten Small Livestock animals for each acre of open space.

3. Lots smaller than ten acres may have up to six Domesticated Animals. Lots that are ten acres or more may have up to ten Domesticated Animals.

F. Mining (M) Zone District.

1. The regulations for the residential (R) zone district apply to lots with Conditional Use Permits for single-family residences not related to mining activity.

2. A lot with an active mining operation may use Large Livestock for mining labor as the result of an administrative decision by the Planning Director or designee.

G. Mixed Use (MU) Zone District

1. A lot containing a single-family residence may have one Small Livestock animal for each tenth of an acre of open space. Roosters are prohibited.

2. Each dwelling unit may have up to six Domesticated Animals.

H. Mobile Home Park (MHP), Recreational Vehicle Campground (RVC), Commercial (C), and Industrial (I) Zone Districts.

1. Large and Small Livestock are not permitted within these zone districts, with the exception of 4-H project animals.

2. Each Dwelling Unit within these zone districts may have up to six Domesticated Animals.

I. Planned Unit Development (PUD) Zone District.

1. The permissibility of Large and Small Livestock shall be addressed in each PUD plan. Existing PUD zoned lots with no plan may be allowed Large or Small Livestock as the result of an administrative decision by the Planning Director or designee.

2. Unless otherwise regulated by the PUD plan, each Dwelling Unit shall be allowed up to six Domesticated Animals.

J. Buffalo or Bison.

The keeping or grazing of buffalo or bison is permitted only in the Agricultural (A) zone district on lots equal to or greater than 160 acres in size.

1. Any person, firm, or corporation violating any provision of this subsection shall be subject to such penalties provided by Colorado Revised Statutes §30-28-124 (criminal penalties), as amended, provided that the minimum penalty shall be one hundred dollars ($100.00) for each day during which such illegal use of property continues and is found to exist or have existed.

2. Any person, firm, or corporation violating any provision of this subsection shall be subject to such penalties provided by Colorado Revised Statutes §30-28-124.5 (civil penalties), as amended, provided that the minimum penalty shall be five hundred dollars ($500.00)

for each day during which such unlawful use of property continues and is found to exist or have existed.

3. Upon direction of the Board of County Commissioners, either the county attorney or the district attorney may enforce this subsection. Nothing in this section shall preclude or prevent the County from pursuing either criminal or civil remedies, or both as authorized by Colorado Revised Statutes §§30-28-124 and 30-28-124.5 or from instituting an action for injunction, mandamus, abatement, or other appropriate action or proceeding to prevent, enjoin, abate, or remove such violation.

K. BEE-KEEPING.

1. HIVES MAY BE KEPT ACCORDING TO THE FOLLOWING TABLE.

ZONE DISTRICT	**NUMBER OF HIVES**
RESIDENTIAL	2 HIVES PER ACRE, MAXIMUM 5
MOUNTAIN RESIDENTIAL	2 HIVES PER ACRE, MAXIMUM 5
RESIDENTIAL ESTATE, ≥ 20 ACRES	UP TO 25
RESIDENTIAL ESTATE, < 20 ACRES	UP TO 5
RESIDENTIAL RANCH	UP TO 25
AGRICULTURAL SMALL LOT	UP TO 25
AGRICULTURAL	2 HIVES PER ACRE, NO MAXIMUM
MINING W. CUP FOR SFR	2 HIVES PER ACRE, MAXIMUM 5

L. Commercial Use. (See definition – Article IV, Section 4-200)

Use or leasing of property for livestock grazing shall be allowed subject to following conditions:

1. Property owners and their lessees may form a lawfully created “grazing association” where the property parcels are contiguous.

2. A written lease, signed by all property owners participating in the “grazing association” and lessees must exist.

3. The construction and maintenance of any fences within the boundaries of the “grazing association” shall be subject to rules adopted by the property owners within the grazing association. Such rules may not conflict with Colorado statute.

4. No commercial grazing or leasing of acreage of less than thirty-five (35) acres shall occur, unless a valid grazing association and a lease signed by all parties.

Section 5-701a

Park County Land Use Regulation to Address the Unlawful Grazing of Livestock

A. TITLE. This regulation shall be known as the “Park County Land Use Regulation to Address the Unlawful Grazing of Livestock”.

B. AUTHORITY. The Local Government Land Use Control Enabling Act of (Colorado Revised Statutes 29920-101 et seq.) gives Park County “the authority to plan for and regulate the use of land by: … (a) Regulating the use of land on the basis of the impact thereof on the community or surrounding areas; and (b) Otherwise planning for and regulating the use of land so as to provide planned and orderly use of land and protection of the environment in a manner consistent with constitutional rights.” (Colorado Revised Statutes §29- 20-104).

C. PURPOSE. The purpose of this regulation is to protect land located in the County by providing an avenue for mitigating the unlawful grazing of livestock in Park County and its adverse consequences on the environment. It does not relieve the responsibility of the landowners bordering or surrounded by property that is being lawfully grazed of maintaining a lawful fence.

D. DEFINITIONS.

1. "UNLAWFUL GRAZING": Any person(s) who knowingly allows livestock to graze upon property in which such person(s) has no lawful right to pasture or forage livestock, and/or over-stocks property in which such person has a lawful right to pasture or forage livestock causing the livestock to leave such property in order to obtain the proper amount of pasture, forage, or water; and/or allowing livestock to unlawfully remain on incorporated or unincorporated roads, streets or public highways.

2. "LIVESTOCK": Includes horses, cattle, mules, asses, goats, sheep, swine, buffalo, and cattalo, but does not include "alternative livestock" as defined in Colorado Revised Statutes §35-41.5-102 (1).

3. "LAWFUL FENCE": A well-constructed three barbed wire fence with substantial posts set at a distance of approximately twenty feet apart, and sufficient to turn ordinary horses and cattle, with all gates equally as good as the fence, or any other fence of like efficiency.

4. "OWNER": Any person(s), corporation, organization, or otherwise, either having actual ownership, implied ownership or control for the care taking and welfare of livestock.

5. "ACTUAL NOTICE": Actual recorded notice received from a law enforcement agency either by telephone or in person and followed up with a written notice.

6. "REASONABLE TIME":

   a. In regards to livestock at large on an open highway not normally grazed, a reasonable time shall be, once the livestock owner has received actual notice, time to prepare and lawfully drive from the local headquarters of the livestock owner to the location of the livestock.

   b. In regards to the unlawful grazing of livestock, a reasonable time shall be forty-eight (48) hours, from the time of actual notice, to remove the livestock unless the landowner and livestock owners have; mutually agreed upon a longer time period.

7. "OPEN RANGE": An area in which livestock is lawfully pastured on both sides of a road or highway. In such cases, adequate warning to motorists is given by proper signage warning of livestock being on the road or highway.

E. UNLAWFUL GRAZING OF LIVESTOCK CONSTITUTES A MISDEMEANOR.

1. It is unlawful for any person(s) who, after a reasonable time has passed after receiving actual notice, knowingly allows the unlawful grazing of livestock; and

2. Any person violating this section is guilty of a misdemeanor and, upon conviction thereof, shall be punished by a one hundred dollars ($100.00) fine and/or ten (10) days in jail. For each day the violation continues, an additional count shall be added up to one thousand dollars ($1,000.00) fine and/or six (6) months in jail.

F. ENFORCEMENT.

1. The Park County Sheriff's Office and the Park County Animal Control shall enforce the provisions of this regulation.

2. Any peace officer in hot pursuit of any animal(s) in apparent violation of this regulation may enter into municipal corporate limits or upon private property for the purpose of enforcing this regulation, including impoundment of such animal(s), ascertaining the ownership of such animal(s), or issuing a citation to the owner(s) of such animal(s).

G. DISPOSITION OF FINES AND FORFEITURES. All fines and forfeitures collected pursuant to this regulation shall be paid over to the County Treasurer.

H. CAPTIONS. The captions and paragraph headings used throughout this regulation are for the convenience of reference only, and the words contained therein shall in no way be held or deemed to define, limit, describe, explain, modify, amplify or add to the interpretation, construction or meaning of any provision of this regulation.

I. SEVERABILITY. If any provision of this regulation or the application thereof to any person or circumstances shall to any extent be invalid or unenforceable, the remainder of this regulation, or the application of such provision to parties and circumstances other than those to which it is invalid or unenforceable, shall not be effected hereby, and each provision of this resolution shall be valid and enforced to the fullest extent permitted by law.

Section 5-702 Bed and Breakfasts.

Every Bed and Breakfast use shall meet and conform to the following requirements:

A. One (1) parking space shall be provided for each guest bedroom, and two (2) spaces for the owner's unit in the building.

B. The building shall meet all applicable height and setback requirements for the zone district in which the building is located.

C. All signage for the use shall conform to the requirements of Division 8 of Article V.

D. The property used for a bed and breakfast shall also serve as the primary residence of the owner or manager. For purposes of this use, an owner is one who holds a fifty percent (50%) ownership interest or greater in the property.

E. No long-term rental of rooms shall be permitted. The maximum stay for any one (1) guest shall not exceed twenty-eight (28) days.

F. All guestrooms shall be located within the principal building.

G. No meals shall be served to members of the public other than persons renting rooms for nightly occupancy.

H. No cooking equipment shall be allowed in any guestrooms.

I. Unless water services are obtained by a municipal or central water system, the owner's water source must comply with state law.

II.

Section 5-703 Reserved

Section 5-704 Reserved

Section 5-705 Home Occupations.

All Home Occupations (both Major and Minor Home Occupations as defined by Article IV) shall meet all of the following standards; failure to comply with such standard shall render the Home Occupation unlawful:

A. One (1) Home Occupation Per Resident. Only one (1) Home Occupation per full-time resident may be conducted with no more than a total of three (3) authorized Home Occupations within any Dwelling Unit.

B. Owner as Operator. A full-time resident of the Dwelling Unit on the lot must conduct the Home Occupation. Only two (2) additional persons may be employed in the conduct of the Home Occupation. If any employee is not a full-time resident of the Dwelling Unit on the lot the Home Occupation is a Major Home Occupation.

C. Exterior Appearance. There will be no exterior evidence, other than a sign no larger than two square feet in area to indicate that a building is being used for any purpose other than that of a Dwelling Unit or an accessory structure to such Dwelling Unit.

D. Off-Street Parking Required. All parking for customers and visitors must be provided on the same Lot as the Dwelling Unit.

E. Nuisances. The home occupation shall not cause any odor, dust, smoke, fumes, vibration, noise, heat, glare, or electromagnetic interference, which can be detected at or beyond the property line.

F. Storage. All storage of equipment, material, goods, merchandise, or stock shall be in a building.

G. Hazardous, Flammable, or Explosive Materials. No Home Occupation may include the storage or presence on the premises of Explosives, Fireworks, Flammable Liquids or Solids, and other Hazardous Materials as defined in 2006 International Building Code §307.2, except motor fuels in approved containers not to exceed fifty (50) gallons.

H. Limited Delivery Vehicles. A Home Occupation that generates more than sixteen vehicle trips a day is a Major Home Occupation.

I. No Vehicle Related Uses Allowed. Home Occupation may not include Vehicle Repair Service, Vehicle Center, Vehicle Storage Yard, Heavy Vehicle and Equipment Storage, Salvage Yard, or Vehicle Sales.

Section 5-706 Construction Dwellings.

A. Temporary Construction Dwelling Permitted. A Construction Dwelling may be located in any zone district subject to the following requirements:

1. The dwelling must be a recreational vehicle, camper, manufactured building, or other similar shelter that includes interior areas and facilities for water, wastewater (sewer), heat, and sleeping accommodations and meets all applicable building codes. Mobile Homes may not be used as Construction Dwellings.

2. A Construction Dwelling shall only be a lawful use if each of the following requirements are met or satisfied:

a. The dwelling must be registered with the Park County Planning Department.

b. There shall be a valid and effective building permit issued for the property on which the Construction Dwelling is located authorizing construction of a permanent residential building on the same lot.

B. Use Deemed Unlawful. Failure to meet or satisfy the requirements of both (A)(2)(a) and (b) above shall render the Construction Dwelling an unlawful use.

C. Removal of Construction Dwelling. Construction Dwellings that are not recreational vehicles or campers must be removed from the lot before a certificate of occupancy is issued for the permanent residence, unless the Construction Dwelling is permitted as a Guest House or Accessory Structure.

Section 5-707 Outdoor Events.

A. Purpose. This section governs the review and conduct of proposed Outdoor Events. These regulations are necessary to ensure that the use is conducted in a manner that is consistent with the land use regulations, protects the public health and safety, and ensures that adequate sanitation, water supply, security, law enforcement, and medical emergency services are provided to the public.

B. Attendance. The attendance of an outdoor event shall include, but is not limited to, organizers, vendors, entertainers, service providers, volunteers, staff, emergency staff, security, support services, and guests; determined by the highest number of people that will be present at any time during the outdoor event.

C. Permits and Permit Applications. Outdoor event permits are required as follows. These regulations are applicable regardless of whether a permit is required.

1. Permits are not required for outdoor events at which attendance will be 150 or fewer people.

2. Permit applications for outdoor events at which attendance will be 151 to 1,000 people will be reviewed administratively, and/or by the Planning Commission and Board of County Commissioners, at the discretion of the Director of Development Services or Designee.

3. Permit applications for outdoor events at which attendance will be between 1,001 and 3,000 people will be reviewed by the Planning Commission and Board of County Commissioners at public hearings in accordance with Section 6-206.

4. Outdoor events at which attendance will be greater than 3,000 people are not allowed.

5. Permit applications must be submitted at least 90 days prior to an outdoor event subject to administrative review, and 120 days prior to an outdoor event subject to Planning Commission and Board of County Commissioners review.

6. Refer to the current permit application for further information on submittal requirements and required application requirements. Staff shall render a completeness determination in accordance with Section 6-202.

7. Applicable agency referrals, in accordance with Section 6-203, are required for all outdoor event applications.

D. Posting and Notice.

1. Posting and notification requirements for outdoor events shall be per Section 6-204. Notice shall be mailed to adjacent property owners.

2. The County shall develop and maintain lists of all pending and approved outdoor event applications on its web site.

E. General Outdoor Event Restrictions. Outdoor events will be permitted only if County, State, and local infrastructure and resources can accommodate the outdoor event on the requested date(s). Priority

will be given to Traditional Community Outdoor Events, regardless of the order in which applications are received.

F. Duration. The duration of an outdoor event is the length of time between the arrival of the first guest or paying attendee and the departure of the last guest or paying attendee. Music and camping outdoor events will be limited to a 48-hour duration, unless otherwise approved by the Board of County Commissioners. Time for setting up prior to the Outdoor Event and cleaning up after the Outdoor Event are not included in the duration, but shall be limited to 24 hours each unless otherwise approved by the Board of County Commissioners.

G. Minimum Requirements. At a minimum, an Outdoor Event shall be operated in accordance with the following requirements. Some requirements may be reduced and/or waived for outdoor events with attendance of less than 500 people.

1. Access

a) The site shall be provided with convenient and safe access for the ingress and egress of pedestrian and vehicular traffic.

b) The site shall be accessible to a public road via an existing road system meeting the design standards for a public or private road pursuant to the Park County Standard Specifications for Road and Bridge Construction, Appendix D.

c) Adequate provision shall be made for traffic control and safety on affected public roads. Operators of Outdoor Events shall coordinate traffic control with Park County Road & Bridge, the Sheriff's Office, the Colorado State Patrol, the Colorado Department of Transportation, and Park County Communications and Emergency Operations. The operator shall be responsible for any associated costs incurred by these agencies.

d) Adequate parking shall be provided, in conformance with County and State requirements, and industry standards.

e) A written access and traffic control plan must be submitted and approved prior to issuance of an outdoor event permit.

2. Grounds

a) At least 20 square feet per person shall be provided for daytime assemblage, and at least 40 square feet per person shall be provided for overnight assemblage.

b) Facilities shall be well drained and so arranged as to provide sufficient space for people, vehicles, sanitary facilities, and appurtenant equipment.

c) Trees, underbrush, large rocks and other natural features shall be left intact and undisturbed to the extent possible. Natural vegetative cover shall be retained, protected and maintained so as to facilitate drainage, prevent erosion, and preserve scenic attributes.

d) Grounds shall be maintained free from dust wherever possible, accumulations of refuse, and other health and safety hazards constituting a nuisance.

e) The size of outdoor event shall be limited to the number of people for which the facilities are designed and approved to accommodate, and provisions shall be made to prevent people in excess of the maximum permissible number from gaining access to the group gathering area. Application fees, guarantees, and fee assessments, and other costs described herein shall be assessed retroactively if the outdoor event attendance exceeds the anticipated attendance.

f) Illumination shall be provided, at night, to protect the safety of the people at the outdoor event. The grounds shall be adequately lighted, but shall not unreasonably reflect beyond the assembly area boundaries. Light level intensities shall be at least five foot candles in assembly areas.

g) A detailed site plan shall be submitted and approved prior to issuance of an outdoor event permit.

3. Noise

a) Activities shall be conducted in conformance with the County noise ordinance and State regulations.

b) A narrative describing anticipated noise impacts and mitigation methods shall be approved prior to issuance of an outdoor event permit.

4. Safety and Security

a) Law enforcement and security services shall be provided and maintained as agreed upon with the Sheriff's Office prior to the outdoor event.

b) The Outdoor Event operator shall arrange for the provision of additional law enforcement services by the Sheriff's office and be responsible for any associated costs.

c) Emergency medical services shall be provided during the Outdoor Event. Where the projected attendance will exceed five hundred (500) people, a manned, full time emergency medical station shall be provided within the site of the Outdoor Event, and shall be enclosed and covered. The operator shall arrange for the provision of emergency medical services by the local ambulance district and/or independently retained services, as approved by the local fire district, and be responsible for any associated costs.

d) Outdoor event sites shall be maintained and used in a manner as to prevent fires and in accordance with applicable local fire prevention regulations. The operator shall arrange for the provision of fire protection services by the local fire district and/or independently retained services, and be responsible for any associated costs.

e) The Sheriff or Designee, in the capacity of fire marshal, may dictate site-specific or local fire bans and/or restrictions. The local fire chiefs may also dictate site-specific fire bans and/or restrictions. Propane/butane or similar apparatuses, as approved by local fire district(s), are allowed. No ember or spark emitting fires are permitted. Individual camp fires within designated fire rings with screening are permitted.

f) All temporary and permanent facilities shall meet all applicable Codes. The County and/or State reserve the right to require inspection of outdoor event facilities, and review of specifications for temporary structures.

g) Telephone and radio communication shall be provided and maintained, as deemed necessary for emergency purposes.

h) A safety and security plan, including communications, shall be approved prior to issuance of an outdoor event permit.

5. Health and Sanitation

a) All applicable regulations of the State and County Health Departments shall be met. The operator, at the operator's cost and expense, shall provide measures required by these agencies.

b) All food preparation facilities shall be licensed per State requirements.

d) An adequate, safe supply of potable water, meeting all applicable requirements, shall be provided.

e) Required sanitary facilities shall be provided per County and State regulations.

f) All liquid and solid waste disposal shall meet all applicable requirements.

g) The storage, collection, transportation, and disposal of refuse shall be conducted as to prevent odor, insect, rodent, and other nuisance conditions; and in accordance with County and State regulations.

h) A health and sanitation plan shall be approved prior to issuance of an outdoor event permit.

6. Financial Guarantees and Permit Fees

a) Permit fees shall be adopted by resolution of the Board of County Commissioners.

b) The County may require monetary deposits, bonds, and/or written agreements to provide for a sufficient financial guarantee, as determined by the County, for restoration and cleanup of site access or other County property or interests.

c) The Sheriff's office may require monetary deposits, bonds, and/or written agreements sufficient to guarantee payment for services required by this section.

d) The local ambulance district(s) may require monetary deposits, bonds, and/or written agreements sufficient to guarantee payment for services required by this section.

e) The local fire district(s) may require monetary deposits, bonds, and/or written agreements sufficient to guarantee payment for services required by this section.

f) Other service agencies may require monetary deposit, bonds, and/or written agreements sufficient to guarantee payment for services required by this section and application County and State requirements.

7. Insurance

a) For events charging admission, a certificate of liability insurance, or letters of commitment for insurance, shall be submitted with outdoor event applications.

b) The coverage shall extend to all activities and events and provide at least a minimum coverage of $1,000,000 per occurrence; $3,000,000 aggregate or such higher amounts as may be required by the County.

c) Park County shall be named as an additional insured.

8. Traditional Community Events – Requirement Exemptions

a) Traditional Community Events may be exempt from the following requirements:

(1) Permit fees.

(2) Monetary deposits and performance bonds.

(3) Proof of insurance.

(4) Notification by mail.

(5) Planning Commission and Board of County Commissioners review, regardless of attendance, unless the application is referred for hearing by the Director of Development Services or Designee.

9. Standards of Approval.

a) In considering any application for an Outdoor Event permit, the following standards shall be applied. The applicant shall bear the burden of proof of these and the resolution or administrative decision approving the application shall be issued only if it appears by clear and convincing evidence that the following conditions or circumstances exist.

(1) The subject property has physical characteristics that are compatible with the proposed outdoor event.

(2) The outdoor event will comply with all applicable requirements of these Land Use Regulations and all applicable requirements of other governmental agencies.

(3) Proposed access to the property from public rights-of-way is sufficient to accommodate anticipated traffic and emergency vehicles.

(4) Where the owner, applicant, or affiliated person has previously conducted the proposed outdoor event or substantially similar outdoor event, the event was conducted in accordance with federal, state, and County requirements.

(5) Sufficient emergency response resources have been arranged for and will be provided to ensure the safety of attendees, without impacting the safety of others.

(6) The Outdoor Event is not unduly disruptive to permitted or existing uses in the immediate area.

10. Conditions on Approval of an Outdoor Event Permit

a) The Director of Development Services or Designee, or Board of County Commissioners, may impose reasonable conditions on the approval of any Outdoor Event permit where such conditions are necessary to ensure the continuing use of the property in conformance with these Land Use Regulations or the requirements of other government agencies.

H. Responsibility for Compliance. The Outdoor Event operator and property owner shall be jointly and severally responsible for meeting the provisions of these standards and regulations, assuring that attendance does not exceed the maximum approved, for operational maintenance, for the clean, safe and sanitary condition of the grounds, sanitary facilities and other service equipment; fully implementing the fire, safety and medical plans; cooperating with law enforcement, medical personnel and fire safety staff; complying with all federal, state and local laws; and fully implementing the noise reduction, crowd control and traffic safety plans.

I. Liability of Event Operator and Land Owner. In addition to any fines or penalties assessed under any other law or regulation, event organizers and landowners will be liable for all violations of the noise ordinance, State regulation, and/or noise limits applicable to the Outdoor Event, in the following amounts:

1. $500 for the first offense, and

2. $10,000 for the second offense and each subsequent offense.

J. Revocation of Outdoor Event Permit

1. The Director of Development Services or Designee may revoke any Outdoor Event permit by an administrative decision finding that:

a) The Outdoor Event has failed to comply with any condition of the Outdoor Event Permit and the applicant has not remedied the failure immediately following notification by the County; or

b) The Outdoor Event has failed to comply with any federal, state, or local law and the applicant has not remedied the failure immediately following notification by the County.

Section 5-708 Fences.

The following standards shall apply to all fencing throughout Park County.

A. Permanent Fencing. Fencing at natural grade intended for permanent placement shall be typically constructed of but not limited to metal, stone, wire, barbed wire, chain links, or wood or wood products. Concertina or razor wire is prohibited in all zone districts except for county detention and emergency facilities.

B. Construction Fencing. Temporary fences at natural grade blocking access to construction activities shall be typically constructed of chain links, wood or wood products, or commercial plastic safety fencing. Concertina or razor wire is prohibited in all zone districts except for county detention and emergency facilities.

C. Electrically Charged Fencing. Aboveground electrically charged fences are permitted in all zone districts except for the Residential (R), Commercial (C), and Rural Center Mixed Use (MU) zone districts. Residentially (R) zoned lots containing large livestock may have aboveground electrically charged fences. Hidden or buried perimeter fencing designed to restrain Domesticated Animals from leaving property by means of a low-voltage electric shock triggered from a collar is permitted in all zone districts.

D. Fences in Rights-of-Way. No fence, wall, or other improvement shall be erected within a public right-of-way except fences and walls erected by the County or erected in accordance with a written license or permit agreement with the County.

E. No Obstruction to Traffic. Fences and walls shall be erected and maintained in a manner, which does not obstruct the vision of automobile traffic on any adjacent street, road, right-of-way, or driveway. No fences, walls, or other obstructions to view over forty-two (42) inches in height shall be placed within fifty-five (55) feet of the point of intersection of lot lines abutting a street corner.

F. Compliance with State Law. Property owners shall comply with state statutes pertaining to fences at C.R.S. §§35-46-101 through 35-46-114.

Section 5-709 Lighting.

A. Purpose. The purpose of this Section is to regulate outdoor lighting in order to reduce light pollution, prevent glare and light trespass, promote a sense of safety and security, and ensure aesthetically appropriate outdoor lighting in keeping with the rural and small town character of Park County.

B. Exemptions. The following types of outdoor lighting are exempt from the provisions of this section.

1. Traffic control signals and devices.

2. Street lights installed prior to the effective date of these land use regulations.

3. Temporary emergency lighting (i.e. firefighting, police work, infrastructure repair) and any permanent emergency lighting required by building code.

4. Lights on moving vehicles.

5. Navigation lights (i.e. airports, heliports, and telecommunications towers).

6. Seasonal decorations in place no longer than 60 days at a time.

7. Specially approved lighting of temporary outdoor events.

8. Security lights of any wattage that are controlled by a motion-sensor switch.

9. The lighting of the flags of the United States of America and/or the State of Colorado with a maximum of two fixtures.

10. Lighting of agricultural uses of land on lots of at least 160 acres.

C. Lighting Plans Required for Certain Applications. All applications for Preliminary Plan of a Major Subdivision or a Planned Unit Development must include a proposed lighting plan that meets the functional and security needs of the proposed land use without adversely affecting adjacent properties or the neighborhood. The Planning Director may require a lighting plan with any administrative or non-administrative application where it is determined that the proposed development will likely result in lighting impacts upon adjacent properties due to the development's size, geographic location, or type of use. Lighting plans shall contain the following items:

1. A site plan with the location of all non-exempt exterior light fixtures.

2. Manufacturer's drawings of all non-exempt fixtures.

3. Drawings of all relevant building elevations showing the location and aiming points of non-exempt fixtures.

D. General standards for outdoor lighting. The following general standards shall apply to all outdoor lighting not exempted above:

1. Site lighting that may be confused with warning, emergency or traffic signals is prohibited.

2. Background spaces, such as parking lots must be illuminated as unobtrusively as possible to meet the functional needs of safe circulation and protecting people and property. Foreground spaces, such as building entrances and plaza seating areas, must use local lighting that defines the space without glare.

3. Light sources must direct light downward and be concealed or shielded to mask the surface of the bulb or light-emitting element from adjacent properties. The following tables illustrate unacceptable and acceptable types of light fixtures.

Wall-Mounted Lights

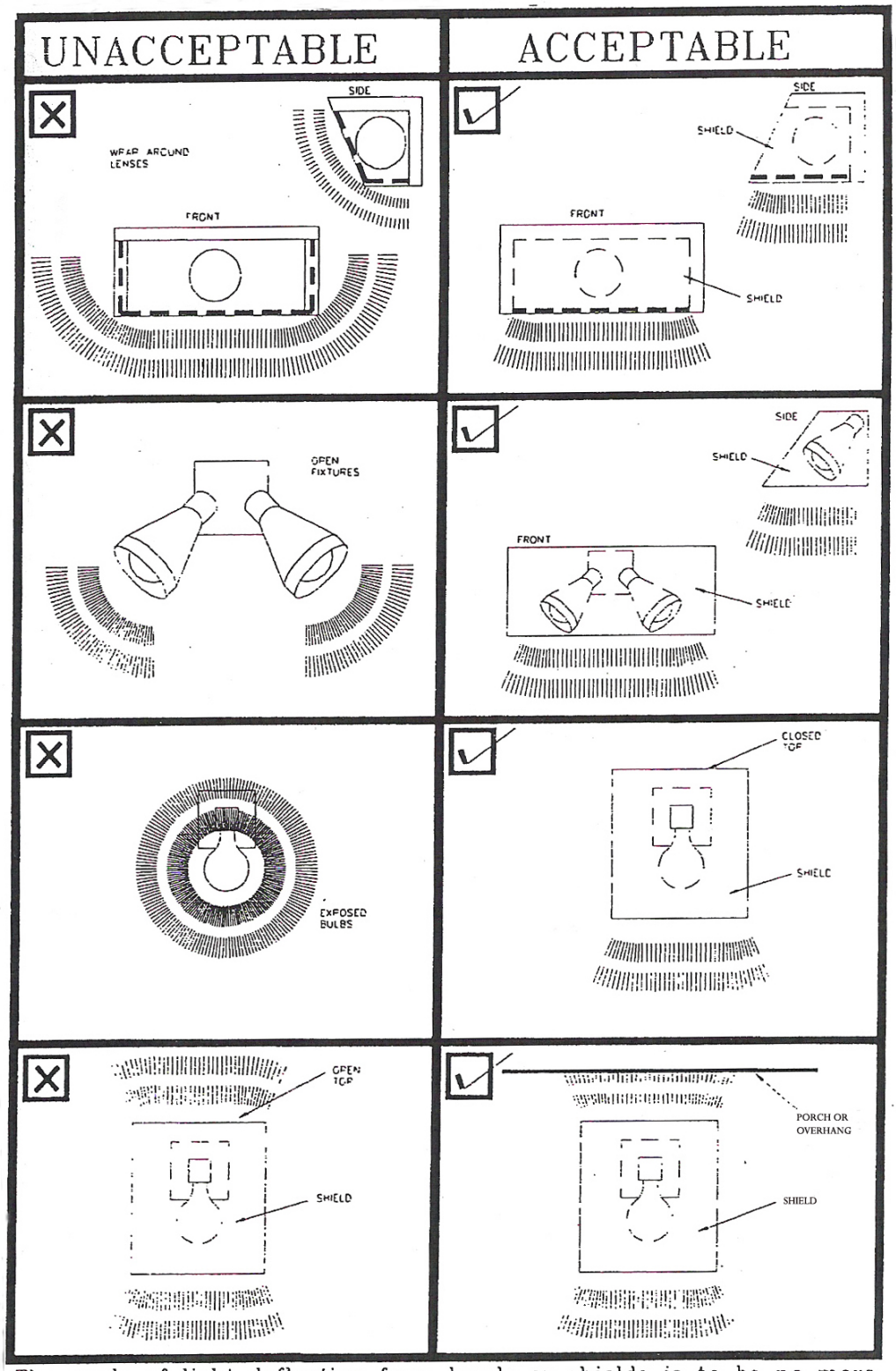

The angle of light deflection from hoods or shields is to be no more than 45 degrees perpendicular through the light source (bulb or tube).

Free Standing Lights

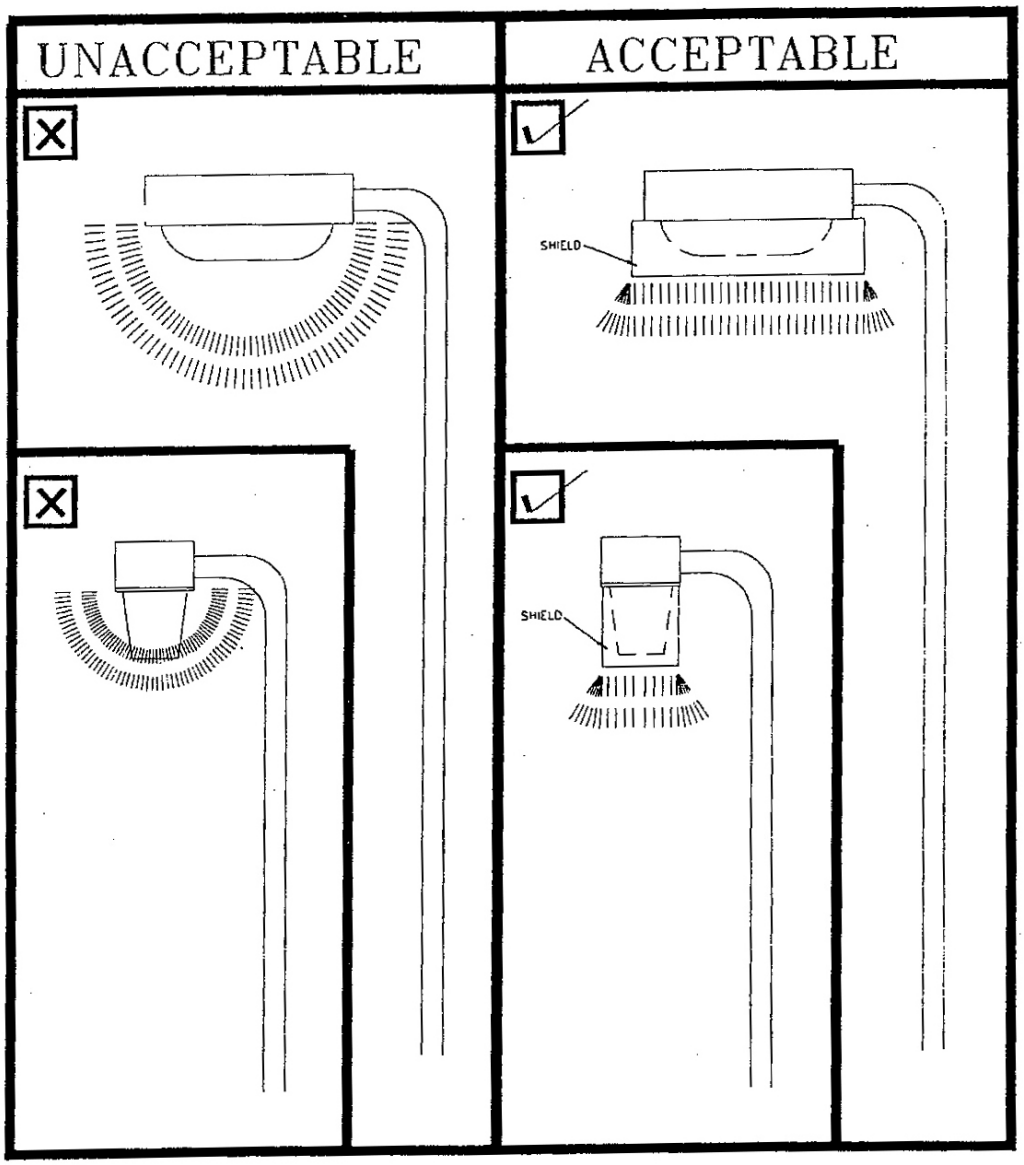

Street and Parking Lot Pole Lights

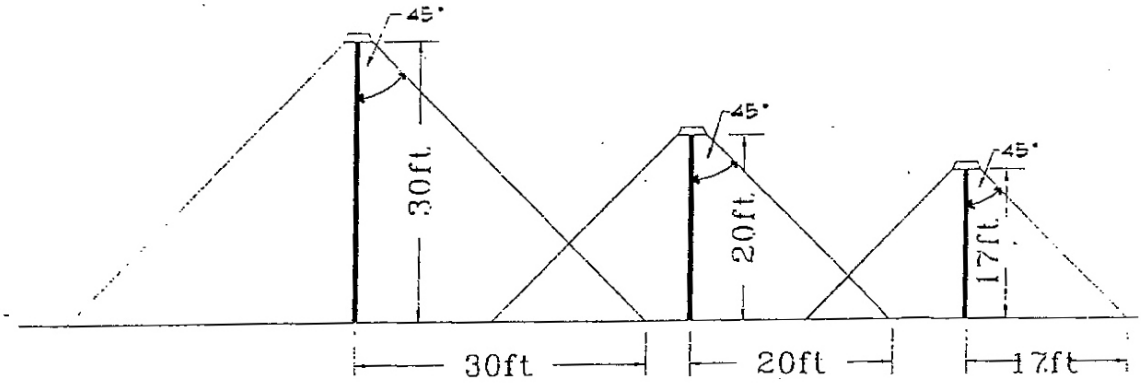

Off-Wall, Building, Foliage, Sign, and Escarpment Lights

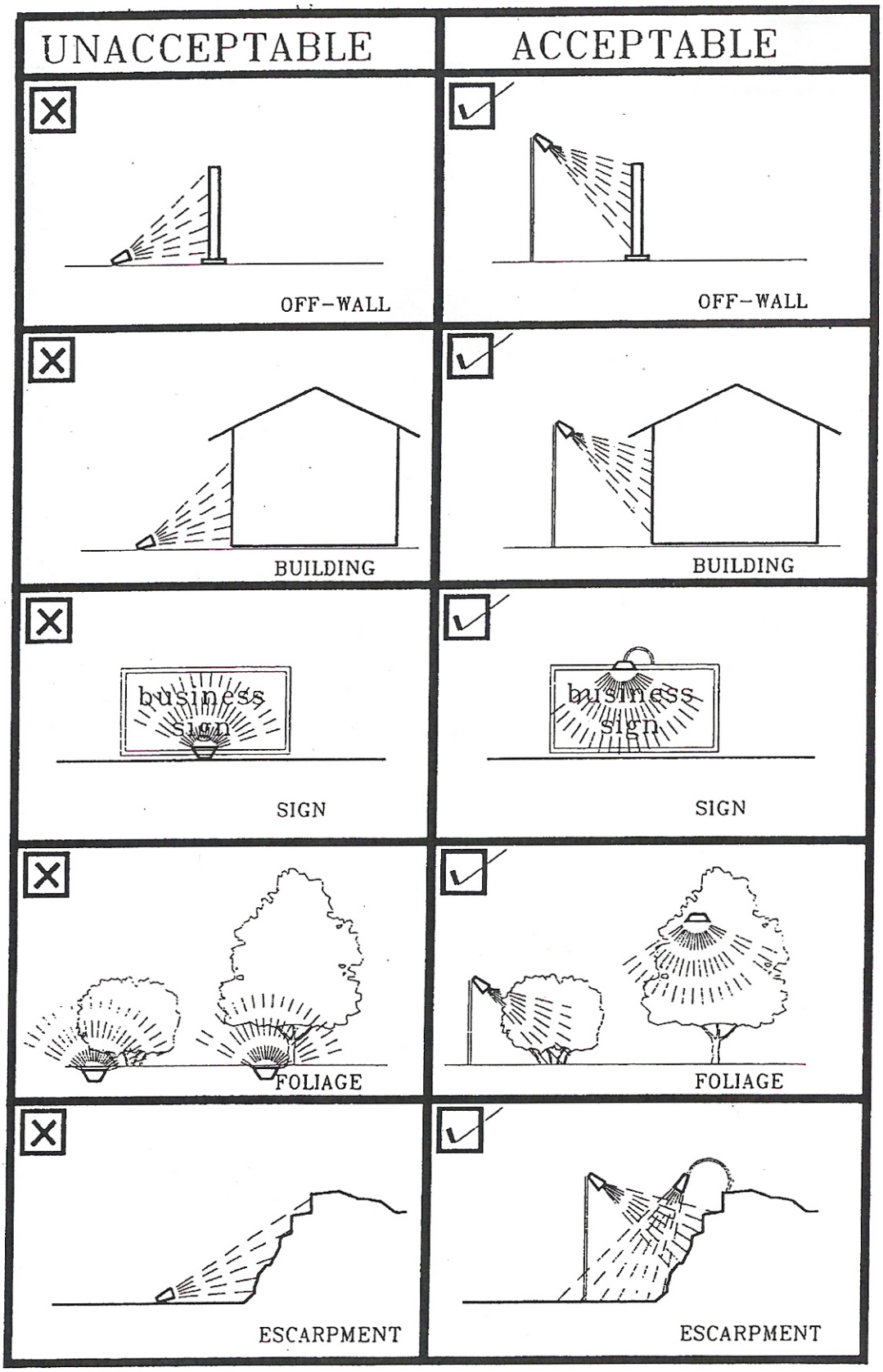

Street and Lot Light Cut-Off at Property Line

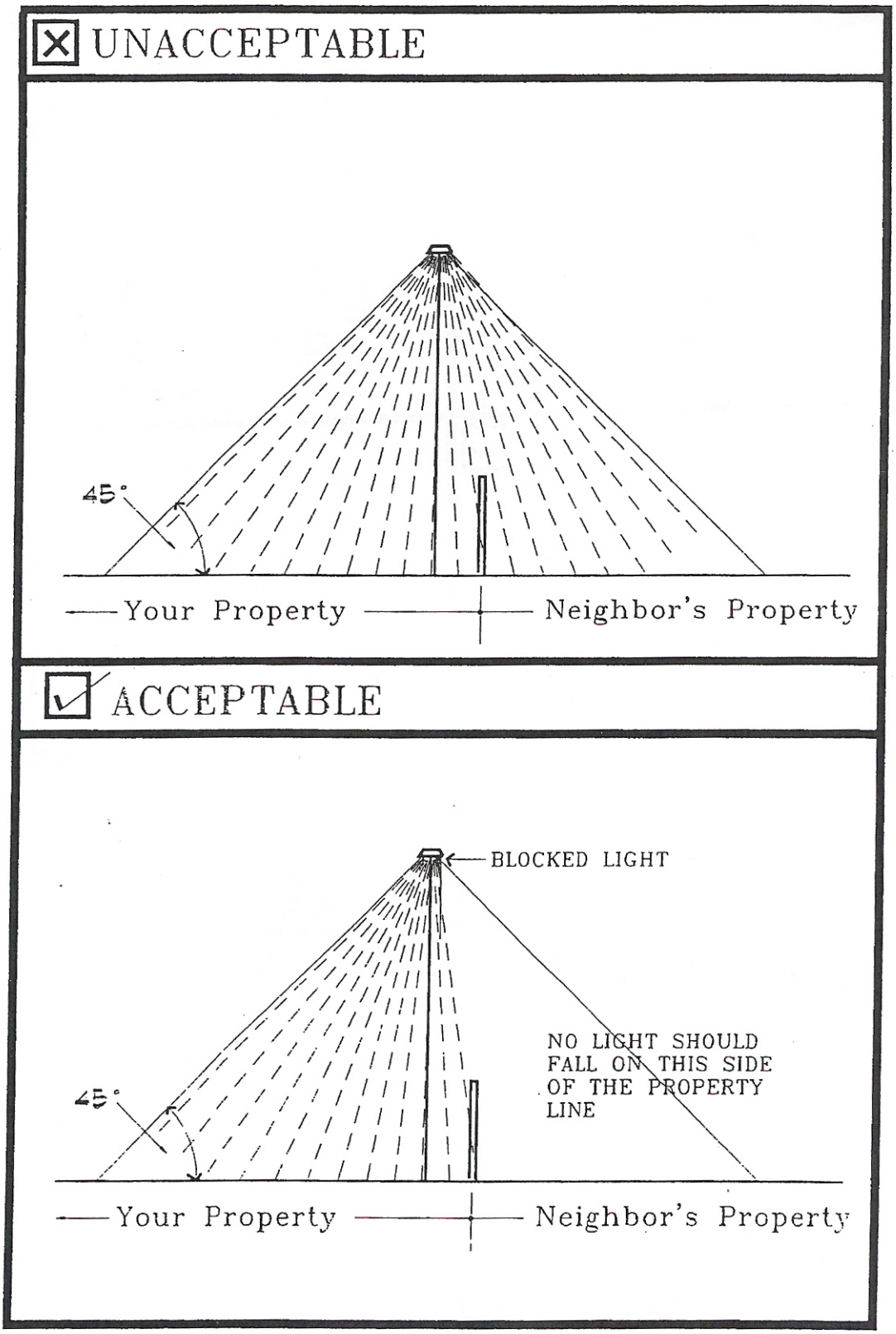

4. The style of light standards and fixtures must be consistent with the style and character of architecture proposed on the site.

5. Light sources must produce accurate color rendition.

6. Maximum on-site lighting levels must not exceed ten (10) foot-candles, except for loading and unloading platforms where the maximum lighting level is twenty (20) foot candles.

7. Light levels measured twenty (20) feet beyond the property line of the development site (adjacent to residential uses or public rights-of-way) must not exceed one–tenth (1/10) foot candle as a direct result of the on-site lighting.

8. The mounting height of light fixtures shall be as follows:

   a. The height of wall-mounted fixtures shall not exceed the height of the wall to which they are mounted.

   b. Freestanding light fixtures shall be mounted no more than fifteen feet high.

Section 5-710 Noise.

Refer to applicable ordinances for laws regarding noise in Park County.

Section 5-711 Small Alternate Energy Systems.

A. Purpose. The purpose of this section is to regulate the type and placement of small alternate energy systems in order to protect the public health, safety, and welfare.

B. Definitions.

Meteorological Tower: Equipment that is used to monitor or transmit wind characteristics in order to analyze the feasibility of wind energy systems.

Small Hydroelectric Energy System: Equipment that converts the gravitational force of flowing water into electrical energy, without damming or diverting the water, solely for consumption by a lawful use on the lot that the equipment is located on, except that if the lot is connected to a distribution line owned by a utility company excess energy not needed for the lot's primary use may be used by the utility company (i.e. net metering).

Small Geothermal Energy System: A central heating and/or cooling system that exchanges heat with the earth solely for a lawful use on the lot that the equipment is located on.

Small Solar Energy System: Equipment that converts solar energy into electrical energy solely for consumption by a lawful use on the lot that the equipment is located on, except that if the lot is connected to a distribution line owned by a utility company excess energy not needed for the lot's primary use may be used by the utility company (i.e. net metering).

Small Wind Energy System: Equipment that converts wind energy into electrical energy solely for consumption by a lawful use on the lot that the equipment is located on, except that if the lot is connected to a distribution line owned by a utility company excess energy not needed for the lot's primary use may be used by the utility company (i.e. net metering).

Total Height: The vertical distance from the ground to the tip of a wind generator blade when the tip is at its highest point.

C. Meteorological Towers (Anemometers). Meteorological Towers (Anemometers) are exempt from height requirements; however, the use of the same must be registered with the Planning Director or designee and can only be used and erected for one year after installation.

D. Small Wind Energy System Permissibility and Standards. Small Wind Energy Systems and Meteorological Towers are a permitted use in all zone districts if they are rated at 10 kW or less and have a Total Height of fifty feet or less. Small Wind Energy Systems and Meteorological Towers that are rated at 10kW or less and are proposed to exceed fifty feet in Total Height require approval of a variance from the Board of Adjustment. Small Wind Energy Systems and Meteorological Towers that are rated at over 10kW are a conditional use in all zone districts regardless of height. A Small Wind Energy System or Meteorological Tower and its ancillary equipment are not considered to be accessory structures for the purpose of any numerical limit on accessory structures. All Small Wind Energy Systems and Meteorological Towers are subject to the following standards:

1. Certification: All Small Wind Energy Systems must either be approved by a certification program recognized by the American Wind Energy Association or the United States Department of Energy, or must submit a description of the safety features of the System prepared by a licensed mechanical engineer. This documentation must be approved by the Planning Department prior to issuance of any building permits.

2. Setbacks: Towers must be set back a distance equal to 1.1 times their total height or 100 feet, whichever is greater, from any right-of-way, overhead utility line, or property line for the lot on which it is placed. Any guy wire anchor points must conform to the zone district's structural setback requirements. This setback requirement may be reduced by a resolution of the Board of Adjustment in accordance with Article II Division 1.

3. Blade Clearance: No portion of the Small Wind Energy System blade sweep shall extend within twenty feet of the ground. No blade sweep may extend over parking areas, driveways, or sidewalks.

4. Access: All ground mounted electrical and control equipment shall be secured to prevent unauthorized access. Towers must be designed to not provide step bolts or a ladder accessible for at least twelve feet above the ground.

5. Appearance: All Small Wind Energy Systems shall remain painted or finished as originally done by the manufacturer. Repainting or refinishing for maintenance purposes shall replicate the original appearance, or may be done for camouflaging purposes if approved by an administrative decision of the Planning Director. Lighting of Small Wind Energy Systems is prohibited unless such as is required by the Federal Aviation Administration. Signs on the equipment are prohibited except for the manufacturer's or installer's identification and appropriate warning signs for safety purposes.

6. Code Compliance: Small Wind Energy Systems shall comply with all applicable building and electrical codes and may require permitting by the Building Department.

7. Utility Notification: No Small Wind Energy System shall be installed until evidence has been given that the utility company has been informed of the customer's intent to install an interconnected, net metered customer-owned generator. Off-grid systems shall be exempt from this requirement.

8. Abandonment: A Small Wind Energy System that is out of service for a continuous twelve month period will be deemed to have been abandoned. The Planning Director may then issue a notice of abandonment to the owner of the system. If the owner does not demonstrate within thirty days that the system has not been abandoned, the owner shall remove the Small Wind Energy System within three months of receipt of the notice of abandonment.

E. Small Solar Energy System Permissibility and Standards. Small Solar Energy Systems are a permitted use in all zone districts subject to structural height and setback requirements and building code requirements. They are not considered accessory structures for the purpose of any numerical limit on accessory structures. Small Solar Energy Systems shall remain painted or finished as originally done by the manufacturer. Repainting or refinishing for maintenance purposes shall replicate the original appearance, or may be done for camouflaging purposes if approved by an administrative decision of the Planning Director.

F. Small Hydroelectric Energy System Permissibility and Standards. Small Hydroelectric Energy Systems are a permitted use in all zone districts subject to compliance with applicable local, state, and federal codes and regulations. They are not considered accessory structures for the purpose of any numerical limit on accessory structures.

G. Small Geothermal Energy System Permissibility and Standards. Small Geothermal Energy Systems are a permitted use in all zone districts subject to compliance with applicable local, state, and federal codes and regulations. They are not considered accessory structures for the purpose of any numerical limit on accessory structures.

Section 5-712 – Camping on Vacant Residential (MR, R, R-20, R-35) and Mining (M) Parcels.

Purpose. This section governs the review and conduct of camping on residential-zoned (R, MR, R-20, R-35) and Mining-zoned (M) parcels without a permitted dwelling unit. These regulations are necessary to ensure that the use is conducted in a manner that is consistent with the land use regulations, protects the public health and safety, and ensures compatibility with surrounding parcels, and that adequate safety and emergency services can be provided.

A. Property owners shall be permitted to camp on their own property for up to fourteen (14) cumulative days in a calendar year without a permit.

B. Property owners may be granted a permit to camp for up to thirty (30) consecutive days in a calendar year, with one (1) 30-day renewal in any calendar year, under the following conditions.

1. No more than two camping units per lot are allowed.

2. Camping activities shall comply with all structure setbacks for the zone district.

3. Sewage shall be disposed of either at an off-site facility or by means of an on-site system. In either case, the facility or system must be currently permitted or approved by Park County.

4. Trash shall be managed on-site, and removed from the site regularly during camping and upon completion of camping. Bear resistant containers are highly recommended.

5. Camping units shall have current licensing and registration and be in operable road worthy condition, as applicable.

6. Camping units must be removed when not being used under an active camping permit.

7. Legal, permitted access is required per Article VII, Division 2, Section 7-204.

8. Posted address is required in accordance with Article VII, Division 12, Section 7-1207.

One additional 30-day permit renewal may be granted if a permitted on-site wastewater treatment system, consisting of a septic tank and soil treatment area, is used for sanitation.

D. Property owners with adjacent parcels cannot relocate to other parcels to circumvent the time limitations described in paragraphs B and C, above.

E. Camping Permits. No-fee Temporary Use Permits for camping more than fourteen (14) cumulative days per year may be issued upon application to the Development Services Department. In addition to the Temporary Use Permit application requirements described in Article V, Division 6, and Sections 5-600 to 605, the following requirements apply.

1. Applications must be submitted at least fourteen (14) days prior to commencement of camping.

2. The permit shall be posted on the required address post, visible at all times.

3. By applying for a camping permit, the applicant(s)/owner(s) authorizes the County to access the parcel(s) to verify compliance.

F. Camping Units on property with no legal primary structure at the time of the passage of these regulations are hereby declared a non-conforming use, and must be removed from that property within six (6) months of that date. Camping Units remaining on the property after six months shall become an illegal non-conforming use, subject to enforcement by the County.

Section 5-713 – Storage Containers.

A. Purpose. This section governs the use of shipping containers (also known as storage containers) as accessory structures.

1. Permits are required. Permit applications can be obtained from, and are available through, Development Services. The type of permit required and associated permit requirements are dependent upon the proposed use of the structure and modification of the container.

2. No stacking of containers is allowed.

3. Storage containers shall be subject to the structure setbacks applicable to the zone district in which the container is located.

4. Visual mitigation shall be provided so that the container blends with the surroundings, and may consist of berming, fencing, cladding, or painting acceptable to the Director of Development Services or designee. The Planning Department may offer suggestions for visual mitigation.

Storage containers are allowed for storage of materials and tools on parcels of any size during active, permitted construction activities, with prior approval of the County. Such storage containers must be removed prior to obtaining a Certificate of Occupancy.

DIVISION 8 SIGNS

Section 5-800 Signs Generally.

This Division is intended to regulate the erection and maintenance of both permanent and temporary signs within Park County, Colorado. Signs meeting all requirements of this Division are allowed after first obtaining a permit from the County. Regardless of the permanent or temporary nature of the sign, certain signs specified by this Division are prohibited throughout the County. Signs erected which fail to conform to or comply with the requirements of this Division are subject to removal as an illegal structure or use.

Section 5-801 Sign Area Measurement.

The area of a sign shall be measured as follows:

A. The structure or bracing of a sign shall be omitted from measurement unless such structure or bracing is made part of the message or face of the sign.

B. The area of all faces containing written, graphic, or symbolic content intended for display shall be included in determining the total area of a sign.

Section 5-802 Prohibited Signs

The following signs and sign designs are prohibited within all zone districts of unincorporated areas of Park County, Colorado. If the Planning Director determines that any such sign poses an imminent threat to public safety, he or she may immediately have it removed.

A. Any sign not expressly permitted by or conforming with this Division.

B. Revolving beacons.

C. Search lights.

D. Any sign found by the Planning Director to be hazardous by reason of inadequate maintenance, dilapidated condition.

E. Signs located on public property, within public rights-of-way, on street medians or traffic islands, attached to traffic-control devices or traffic-control signs and fixtures, or attached to utility equipment, poles, and wires. This paragraph shall not apply to signs placed by the County, CDOT, or public utility companies.

F. Signs that materially impede vision at street intersections. A sign shall be presumed to materially impede vision if located within a triangular area bounded on two (2) sides by the property lines adjoining the streets of a corner lot and bounded on the third (3rd) side by a line joining points located on the property lines adjoining the streets at points fifty (50) feet from the approximate corner of such corner lot.

G. Signs designed, shaped, and/or painted to mimic, simulate, or represent official traffic control devices, such as but not limited to, stop signs, yield signs, caution signs, or speed limit signs.

Section 5-803 Reserved.

Section 5-804 Authorized Permanent Signs.

The following signs shall be authorized as permanent signs:

A. Within the Agricultural Small Lot (A-35), Residential Ranch (r-35), Residential Estate (r-20), Residential (R), Mountain Residential (MR) Zone Districts, residential subdivisions within the

Rural Center Overlay Areas, Mobile Home Park (MHP) Zone District, and any part or portion of a Planned Unit Development (PUD) Zone District that permits residential use:

1. Residential Subdivision: One (1) permanent Ground Sign at each entry into a platted subdivision from a public right-of-way. Such Ground Sign shall be located within an easement, outlot, or on a lawfully existing permanent fence or structure owned or controlled jointly by the owners of lots within the subdivision or by a homeowners' association. Such sign shall not exceed a total of sixty-four (64) square feet of surface area and twelve (12) feet in height.

2. Each Non-residential Use within such zone districts:

   a. One (1) or more Wall Signs provided that the total surface area for all such Wall Signs does not exceed sixty-four (64) square feet; or

   b. One (1) Ground Sign not exceeding thirty-two (32) square feet of exposed surface area for each face or a total of sixty-four (64) square feet for all surface area and twelve (12) feet in height;

B. Commercial Zones. Within the Commercial (C) Zone District, lots within Rural Center overlay areas used for commercial purposes, and commercial areas of any Planned Unit Development:

Any combination of Ground Sign(s) or Wall Sign(s) provided that no one sign exceeds one hundred (100) square feet in surface area and the total aggregate square footage of surface area for all such signs does not exceed a total of two hundred (200) square feet. Signs with flashing or scrolling messages less than 18 square feet in area and twelve feet in height are permitted within the Commercial zone district.

C. Other Zones. Within the Agricultural (A) Zone District, Conservation/Recreation (CR) Zone District, Industrial (I) Zone District, Mining (M) Zone District, or Recreational Vehicle Park and Campground (RVC) Zone District:

1. One (1) permanent ground sign at each entry into the property or site from a public right-of-way. each ground sign shall not exceed a total of sixty-four (64) square feet for all surface area and twelve (12) feet in height; and

2. Such signs necessary for internal management and direction of on-site traffic and safety within the site such as, but not limited to, parking signs, directional and speed signs, and safety and cautionary signs. Such signs shall not generally be visible from public rights-of-way and shall not be displayed to attract attention to the property or site for commercial purposes.

D. Planned Unit Developments. As part of approval or amendment of any Planned Unit Development (PUD), the Applicant may seek approval of a comprehensive sign plan, which, if approved by the BOCC at the time of approval of the PUD or as an amendment to the PUD, shall govern, and control the display of signs within the PUD notwithstanding provisions of this Division. Upon approval of a comprehensive sign plan, only such signs as are specifically approved by such plan shall be permitted.

E. Off-Premises Signs. Off-premise signs identifying uses, goods or services in Park County oriented toward highway travelers, directional signs for emergency services, or directional signs for developments, are allowed in all zoning districts as follows:

1. The use or service is for highway travelers, emergency services, or development located in Park County.

2. The sign shall be located within fifteen (15) miles of the community in which the use is located, or from the use itself, when located outside of an incorporated community.

3. Each use shall be limited to one (1) off-premise sign per highway approach, not exceeding thirty-two (32) square feet in sign area and a maximum of ten (10) feet in height.

4. The distance between off-premise signs shall be a minimum of six hundred sixty (660) lineal feet.

Section 5-805 Design Standards for Permanent Signs.

In addition to the prohibitions imposed on sign design, form, style, and character this Division, all permanent signs shall be designed and maintained in accordance with the following standards:

A. Artificial illumination compliant with applicable regulations is permitted. Illumination shall be provided only from a concealed and focused light source directed in a manner that prevents illumination beyond the face or surface area of the sign.

B. No sign shall obstruct or impair access to a public sidewalk, public or private street or driveway, traffic control sign, bus stop, fire hydrant, or otherwise create a hazard.

C. All signs shall be designed, constructed, installed, and maintained to be stable under all weather conditions, including high winds.

Section 5-806 Sign Exemptions.

The following signs are exempt from any requirement imposed by this Division and shall be authorized in all zone districts. Such signs are declared to have a minimal impact on the public and do not generally create traffic, safety, or other hazards.

A. Any sign erected by Park County acting in its governmental capacity including, but not limited to, traffic control signs and signs identifying public places such as parks, trails, and public buildings.

B. Any traffic control sign erected by CDOT within a public right-of-way owned or controlled by CDOT.

C. Any number of flags provided that each flag shall not exceed sixty-four (64) square feet in size. Flagpoles shall not exceed two (2) flagpoles for each lot and shall not exceed thirty-five (35) feet in height.

D. Signs in the nature of holiday decorations, clearly incidental and commonly associated with any national, local, or religious holiday. Such signs may be of any type, number, area, height or animation so long as they do not advertise or identify a product or a business and are located so as not to conflict with traffic regulatory devices or traffic safety.

E. Signs located wholly within a building and not visible from any point within a public right-of-way.

F. Signs attached to and associated with scoreboards located or and immediately adjacent to athletic fields owned and controlled by private or public schools.

G. Signs incorporated into and made part of a bus bench lawfully located within the public right-of-way provided that such sign does not exceed sixty-four (64) square feet in size.

H. Signs incorporated into and made part of a public transit shelter or public bus stop shelter lawfully located within a public right-of-way provided that such signs do not exceed two (2) panels each measuring not more than twenty-four (24) square feet in surface area.

Section 5-807 Temporary Signs.

A. Temporary Signs Permitted in All Zone Districts. Temporary signs may be posted on property in all zone districts of the County, subject to the following requirements and any other applicable provisions of these Land Use Regulations and the County Building Code:

1. The total area for all temporary signs posted on a lot, property, or parcel shall not exceed sixty-four (64) square feet, with no individual sign face exceeding thirty-two (32) square feet in area.

2. No temporary sign shall obstruct or impair access to a public sidewalk, public or private street, or driveway, traffic control sign, bus stop, fire hydrant, or any other type of street furniture, or otherwise create a hazard, including a tripping hazard.

3. A temporary sign shall be designed to be stable under all weather conditions, including high winds.

4. No temporary sign shall be illuminated by a dedicated light source unless such light source is compliant with applicable regulations.

5. A temporary sign shall only be posted with the consent of the property owner or occupant.

B. Removal Requirements for Temporary Signs. In addition to the requirements stated above, temporary signs shall comply with the following requirements:

1. A temporary real estate sign shall be removed within fourteen (14) days after the sale or occupancy of the property.

2. All other temporary signs, including those announcing yard sales and special events to occur on one or more particular dates, shall be removed within fourteen (14) days of the conclusion of the sale or event that the sign is promoting.

3. Campaign signs must be removed fourteen (14) days after the election.

C. Removal or Replacement of Signs: It shall be unlawful for the owner or occupant of any property upon which a temporary sign is posted to permit, condone, maintain, or authorize the posting of such temporary sign where this Division requires the removal or replacement of such sign. Upon the failure of the owner or occupancy to remove or replace the temporary sign in accordance with this Division, the Planning Director/County designee is authorized to enter upon private property and remove any temporary sign posted in violation of this Division.

DIVISION 9 TELECOMMUNICATION FACILITIES

Section 5-900 Purpose and Exemption.

A. General. The general purpose of this Division is to regulate the placement, construction, and modification of Towers and Telecommunications Facilities in order to protect the health, safety, and welfare of the public, while at the same time not unreasonably interfering with the development of the competitive wireless telecommunications marketplace in Park County, Colorado. More specifically, the purposes of this Division are:

1. To regulate the location of Towers and Telecommunications Facilities in Park County;

2. To protect residential areas and land uses from potential adverse impact of Towers and Telecommunications Facilities;

3. To minimize adverse visual impact of Towers and Telecommunications Facilities through careful design, siting, landscaping, and innovative camouflaging techniques;

4. To promote and encourage shared use/collocation of Telecommunication Sites as the preferred option to construction of additional single-use Towers;

5. To promote and encourage utilization of technological designs that will either eliminate or reduce the need for erection of new or multiple Tower structures to support Antenna and Telecommunications Facilities;

6. To avoid potential damage to property caused by Towers and Telecommunications Facilities by ensuring such structures are soundly and carefully designed, constructed, modified, maintained, and removed when no longer used or are determined to be structurally unsound; and

7. To ensure that Towers and Telecommunications Facilities are compatible with surrounding land uses.

B. Exemption. This Division shall not apply to property owned or controlled by Park County, Colorado.

Section 5-901 Definitions.

The following words, terms, and phrases, when used in this Division shall have the meanings ascribed to them in this section, except where the context clearly indicates a different meaning:

Applicant: Any Person that applies for a special use permit in accordance with this Division and, in the event the Applicant is not the Owner of the property affected by the application for a special use permit, such Applicant is acting with the lawful written consent of the Owner.

Antenna: Any transmitting or receiving device(s) or equipment mounted on a Tower, building, or structure that radiate, capture, receive, switch, emit, or transmit electromagnetic waves, digital signals, analog signals, radio frequencies, wireless telecommunications signals, or other electromagnetic communication signals including, but not limited to, paging, enhanced specialized mobile radio, commercial mobile radio service, personal communication services, microwave link antenna, cellular telephone, and other related technologies.

Freestanding Facility: A Telecommunication Facility that consists of a stand-alone structure such as a Monopole or Lattice Tower, attached Antenna(e), and associated equipment storage shelter(s).

Lattice Tower: Any Tower or structure designed and constructed primarily to support Antennae for the purpose of providing Telecommunications Services and comprised of interconnected poles, pipes, bars,

beams, strips, wires, or cross-members. A Lattice Tower shall include any type or form of Tower that incorporates guy or supporting wires.

Monopole Tower: Any structure designed and constructed to support Antennae for the purpose of providing Telecommunications Services and which consists solely of a stand-alone ground mounted support pole, pipe, or other solid structure. A Monopole Tower shall not include any Tower supported or attached to guy or support wires.

Owner: Any person with fee title or a long-term (exceeding thirty (30) years) leasehold to any parcel of land within the County who desires to permit the development of, or to construct, build, modify, or erect a Telecommunication Facility upon such owner's property.

Panel Antenna: Any Antenna(e) with both a vertical and horizontal plane designed to receive, transmit, direct, relay, aim, or switch signals associated with Telecommunication Services.

Person: Any natural person, firm, partnership, association, corporation, company, or other legal entity, private or public, whether for profit or not for profit.

Structure or Building-mounted Facility: Any Telecommunication Facility, Antenna, or equipment attached to or mounted upon any already existing structure or building.

Substantial Change: A modification substantially changes the physical dimensions of a Tower, or other structure or building already supporting an Antenna, if it meets any of the following criteria:

1. For Towers outside of public rights-of-way, it increases the height of the tower by more than 20 feet or 10%, whichever is greater; for those Towers in public rights-of-way and for all other structures or buildings already supporting an Antenna, it increases the height of the Tower or other structure or building by more than 10% or 10 feet, whichever is greater;
2. For Towers outside of public rights-of-way, it protrudes from the edge of the Tower more than twenty feet, or more than the width of the tower structure at the level of the appurtenance, whichever is greater; for those Towers in public rights-of-way and for all other structures or buildings already supporting an Antenna, it protrudes from the edge of the structure more than six feet;
3. It involves installation of more than the standard number of new equipment cabinets for the technology involved, but not to exceed four cabinets;
4. It entails any excavation or deployment outside the current site of the Tower or other structure or building already supporting an Antenna;
5. It would defeat any existing concealment elements of the Tower or other structure or building already supporting an Antenna; or
6. It does not comply with conditions associated with the prior approval of construction or modification of the Tower or other structure or building already supporting an Antenna unless the non-compliance is due to an increase in height, increase in width, addition of cabinets, or new excavation that does not exceed the corresponding "substantial change" thresholds identified above.

Whether a modification constitutes a substantial change is determined by measuring the change in height as originally approved or as of the most recent modification prior to February 22nd, 2012, whichever is greater. Also, for structures where colocations are separated horizontally rather than vertically (such as building rooftops), substantial change must be measured from the height of the original structure, rather than the height of a previously approved antenna.

Support Facilities: Support buildings, structures, equipment cabinets, electrical and mechanical equipment, utility poles and lines, and other forms of physical improvements used in support of Towers or Structure-or Building-mounted Facility for the provision of Telecommunication Services.

Telecommunications Facility: The plant, equipment, buildings, fencing, and other real and personal property, including but not limited to cables, wires, conduits, ducts, pedestals, Antennae, Towers,

structures, electronics, and other appurtenances used to transmit, receive, distribute, provide or offer Telecommunications Services. The term Telecommunications Facility shall not include:

- Amateur radio operators' equipment licensed by the Federal Communications Commission;
- Any earth station Antenna two (2) meters in diameter or less which is located in an area zoned industrial or commercial;
- Any non-commercial satellite earth station Antenna one (1) meter or less in diameter, regardless of zoning category;
- Utility meters that enable communication between the meter and central utility system;
- Small cells and distributed antennae systems that are mounted upon or completely contained within a residence or commercial operation and have the sole purpose of improving telecommunications service for occupants of the residence or employees of the commercial operation; or
- Temporary mobile facilities used to accommodate short-term demands, such as for emergency communications, or to evaluate the feasibility of a permanent Telecommunication Facility. At the discretion of the Planning Director/County Designee, temporary mobile facilities may require approval of a Temporary Use Permit.

Telecommunications Provider: A Person, whether public or private, providing a Telecommunications Service.

Telecommunications Service: Any transmission, reception, relay, aiming, switching, or other manipulation of voice, data, image, graphic, and video programming, or other form of information between or among points by electromagnetic signals transmitted wirelessly.

Telecommunications Site: The real property and physical area upon which Telecommunications Facilities are located or proposed to be located, as described in an application for land use approval for such site and such use in accordance with applicable requirements of these Land Use Regulations.

Tower: Any structure designed and constructed primarily to support one or more Antennae for the purpose of providing Telecommunications Service, including but not limited to, Monopole Towers and Lattice Towers. This term also includes any Antenna or Antenna array lawfully attached to the tower.

Tower Height: When referring to a Tower or other structure used for the purpose of erecting, concealing, or supporting one or more Antennae, the distance measured from the base pad to the highest point on the Tower or other structure, including any Antenna attached to the tower.

Whip Antenna: Any Antenna cylindrical in shape and less than eight (8) inches in circumference that emits signals in a three hundred sixty (360) degree horizontal plane for the transmission or reception of wireless communications signals.

Section 5-902 Permit Required.

A Special Use Permit approved in accordance with this Division shall be required for all Telecommunication Facilities within Park County, except for modifications as described in Section 5-907 below.

Section 5-903 Application for Special Use Permit.

A. All applications for a Special Use Permit to authorize a Telecommunications Facility shall include such plans, pictures, drawings and specifications as may be necessary for the County to determine that the application and the proposed facility is consistent with this Division, the Park County Land Use Regulations, and all state and federal regulations governing such use, if any.

B. An applications shall include, at a minimum, the following:

1. A completed application in a form approved by the Planning Director identifying the Applicant and the Owner, and to identify the Applicant's authority to submit the application on behalf of the Owner.

2. Payment of a non-refundable application fee in an amount established by resolution of the Board of County Commissioners to cover the administrative costs of processing the application.

3. A properly executed "Agreement for Payment of Development Review Expenses" in the same form as contained in Appendix C.

4. A complete legal description of the property on which the Telecommunication Site is proposed, prepared by a licensed registered Colorado land surveyor.

5. Evidence of Ownership and Encumbrances for the property on which the Telecommunication Site is proposed.

6. A list of the names and mailing addresses of any owners of property within seven hundred and fifty (750) feet of the proposed Telecommunications Facility as this information appears of record with the County Assessor's Office

7. The names, addresses, and telephone numbers of all owners of other Telecommunication Facilities within a six (6) mile radius of the proposed new facility.

8. A sworn and notarized affidavit attesting to the fact and describing the Applicant's diligent, but unsuccessful, efforts to obtain permission to install or collocate the Applicant's proposed Telecommunications Facilities on other Telecommunication Facilities located within a six (6) mile radius of the proposed site or attesting to the fact and describing, in detail, why such collocation would be technologically impossible. Documentation evidencing diligence in seeking permission and the denial of such permission or documentation of the technological impossibility of collocation, as the case may be, shall be included with the affidavit.

9. A site plan containing a graphic representation of the property subject to the proposed Special Use Permit prepared at a commonly used engineering or architectural scale. The site plan shall include or illustrate:

   a. A general vicinity map of the property subject to the Special Use Permit illustrating the property's location within the County.
   b. Date of preparation, map scale, north arrow, and revision box.

   c. A title that prominently identifies the name of the Applicant and the phrase "Special Use Permit Site Plan."

   d. Information identifying all Telecommunications Facilities, setbacks, maximum heights, proposed conditions or restrictions upon use, and relevant requirements and restrictions applicable to the zone district(s) in which the property subject to the proposed Special Use Permit is located, as identified in these Land Use Regulations.

   e. A signature block that reads: BOARD OF COUNTY COMMISSIONER APPROVAL: The Park County Board of County Commissioners by Resolution No. _____ approved this Site Plan and a Special Use Permit for the illustrated Telecommunication Facility on the _____ day of _____,_____. _____
   Attest: _____ Chairperson
   County Clerk (County Seal)

f. Location and type of natural features within seven hundred and fifty (750) feet of the proposed Telecommunications Facility including watercourses, lakes, topography at not more than ten foot vertical intervals, one-hundred (100) year floodplain, wildlife corridors and known wildlife foraging areas, and significant trees and vegetation.

g. Location of all existing man-made structures, utilities, streets, driveways, ditches, fences, or other physical improvements within seven hundred and fifty (750) feet of the proposed Telecommunications Facility.

h. Approximate location of recorded easements or rights-of-way on the property and within seven hundred and fifty (750) feet of the proposed Telecommunications Facility.

i. Location of vehicular or pedestrian access to the Tower and/or Antenna, equipment, and Support Facilities.

j. The County may require any other information essential to the evaluation of the proposed special use.

C. Special Use Proposal. Illustrations, maps, photographs, and textual descriptions that provide the following information:

1. A written evaluation and report of the visual impact of the proposed facility, including color photographic simulations of the proposed site of the proposed Telecommunication Facility as it would appear from at least three different locations near the facility and legally accessible to the public. The Planning Commission or Board of County Commissioners may request additional simulations to assess the visual impact of the proposed facility. Applicants are encouraged to provide photographic examples of similar facilities and samples of proposed architectural colors and materials to permit the County and interested parties to understand the visual impact of the proposed special use. The report or evaluation shall include a landscape, screening, and fencing plan showing specific landscape materials and locations, fencing materials and colors, and other screening techniques together with illustrative drawings or photographic simulations showing the visual effect of the proposed landscaping and screening from at least three different locations near the facility and legally accessible to the public.

2. Architectural elevation drawings of at least two sides of the proposed Telecommunication Facility.

3. A technological design plan for the proposed Telecommunication Facility. The design plan shall identify the type of telecommunication service to be provided by the Telecommunication Site, the frequency or bandwidths, a general description of the equipment types and models, and a graphic representation of the area to be provided service by the Telecommunication Facility.

4. A copy of any lease or other agreement(s) authorizing the use of the property for the proposed Telecommunication Facility. Applicants may excise or delete from such lease or agreement(s) information considered proprietary or pertaining to rental or lease payment amounts.

5. Description of the size, type, and visibility of any proposed illumination for the site, specifically including lighting attached to any Tower.

6. Information sufficient to demonstrate that the Telecommunications Site is a necessary component of the Applicant's overall communication network and is integrated into a

coordinated communication service plan for the community and for the area. Conformance with this requirement may be established by evidence presented to the County which demonstrates that the proposed site is necessary in order to: (i) provide appropriate signal coverage and quality to the area; (ii) connect and to relay services between existing facilities; (iii) connect and relay services between facilities that are reasonably likely to be constructed within one-hundred eighty (180) days of the application; (iv) handle increased capacity due to customer demand; (v) overcome existing topography and/or structures in the surrounding area that preclude other preferred locations in the same area; or (vi) overcome engineering and technical constraints which require the site to be in the desired location in relation to other existing sites and potential site locations.

7. Information sufficient to demonstrate location of the proposed Antenna and facility upon Towers or structures at other existing Telecommunication Sites and Facilities has been thoroughly explored and is rendered impossible due to one or more of the following: (i) absence of other existing Telecommunication Sites within the area; (ii) incompatibility of an engineering or technical nature between the Applicant's proposed Antenna and Telecommunication Service and existing Telecommunication Sites and Facilities; (iii) lack of sufficient space on existing Telecommunication Sites to permit attachment of the Applicant's proposed Antenna or equipment; (iv) inability to obtain a lease for or permission to use existing Telecommunication Sites despite the exercise of due diligence to do so.

8. Evidence that the Telecommunications Provider has obtained or secured a performance bond, letter of credit, or other surety ("performance guarantee") acceptable to the County Attorney in an amount of one-hundred twenty percent (120%) of the estimated cost and expense of removing the Telecommunication Facility in accordance with Sections 5-908, 5-909 and/or 5-911. All performance guarantees shall authorize the County to obtain the funds secured by the guarantee upon the County's determination that the Telecommunications Facility has not been removed in accordance with this Division or as otherwise required by law. The amount of such performance guarantee shall be based upon an estimate obtained by the Telecommunications Provider, which shall be subject to review and approval of the County. In the event that the County rejects an estimate as inaccurate, incomplete, or incorrect, the County may obtain, at its cost and expense, an estimate, which shall be used for purposes of determining the amount of the performance guarantee. The Telecommunications Provider shall take all action necessary to keep such performance guarantee valid and in effect at all times. Upon any renewal of the Special Use Permit or the modification of an approved Telecommunication Facility, the Planning Director/County designee shall cause the performance guarantee to be reviewed, the appropriate amount of the guarantee reassessed, and a new guarantee shall be posted or secured by the service provider in accordance with this subsection. Expiration of a performance guarantee may, at the option of the County and notice to the Telecommunications Provider, result in the expiration of the Special Use Permit for the Telecommunications Facility.

9. Proof of insurance to insure the public against personal and property damage resulting from negligent installation and/or damages caused by or arising from the construction and maintenance of the Telecommunications Facility site.

Section 5-904 Procedures for Review of Special Use Permit Applications.

A. Review Procedures and Requirements for Approval. Except as described in Section 5-907, all Telecommunication Facilities require approval of a Special Use Permit issued in accordance with this section.

B. Pre-Application Meeting. A pre-application meeting is required. No application shall be accepted or processed by the County unless and until the required pre-application meeting is held.

1. Prior to the formal submission of the application, the Applicant shall contact the Planning Director/County designee in writing to schedule and request an informal meeting with the Planning Director/County designee. Following receipt of a request, the pre-application meeting shall be set for a date within ten (10) days of the date of the Applicant's written request. The Planning Director/County designee shall advise the Applicant of the date and time of the pre-application meeting.

2. The Applicant shall attend the meeting at the designated date and time. The Applicant shall be prepared to discuss the proposed application and the proposed development. The Applicant shall be encouraged to present such plats, plans, diagrams, or other preliminary information sufficient to permit the conceptual review of the proposed application.

3. The purpose of the pre-application meeting shall be to assist the Applicant and Owner in understanding the County's special use permit process and to address any preliminary questions or concerns by the Applicant or the County Staff.

C. Application Completeness Determination. Within fifteen days following receipt of an application for a special use permit for a telecommunication facility, the Planning Director/County designee shall administratively review the application and determine whether the application complies with the applicable application content requirements of this Division.

1. Incomplete Application. The County shall not process or schedule the processing of any incomplete application. In the event the Planning Director/County designee determines that the application is incomplete, the Planning Director/County designee shall inform the Applicant in writing of the deficiencies in the application. No further processing of an incomplete application shall be undertaken until the Planning Director/County designee determines that the Applicant has remedied the application's deficiencies and the application is complete.

2. Complete Application. In the event that the Planning Director/County designee determines that the application complies with the applicable requirements, the Planning Director/County designee shall notify the applicant in writing and schedule the application for public notice and hearing by the Board of County Commissioners.

3. Hearing Notice. Notice of the hearing shall be published in the official County newspaper, mailed to owners of Adjacent Property, and posted on or reasonably near the subject property at least fourteen (14) days before the date of the hearing.

D. Agency Referrals.

1. Following receipt of a completed application, the Planning Director/County designee shall cause the application and supporting materials to be mailed or otherwise delivered to the Local Agencies listed in Section 6-203 (B) for review and comment.

2. It is the responsibility of the agency reviewing the referral to define any potential conflict with the application and to return a written referral response to Park County within the time period specified in the referral letter. A referral response not received in a timely manner may, at the option of the Planning Director/County designee, be excluded from the processing of the application. The lack of response from a referral agency to a request for referral comment shall be interpreted as "no comment" concerning the proposal and shall not be deemed a statement of acceptance or of "no conflict" by the referral agency. The absence of a timely agency comment shall not preclude the Planning Commission or Board of County Commissioners from later seeking a referral agency comment on a specific issue raised during the review process or at any hearing.

3. Failure to forward a referral of an application to an agency as required by this section shall not constitute a material deviation from the review process and shall not void or invalidate any action taken by the Planning Commission or Board of County Commissioners. The requirement of agency referral shall be considered as a preferred, but discretionary, action by Park County.

E. Reasonable Conditions and Term of Permit. The Board of County Commissioners may impose reasonable conditions upon the approval of the Special Use Permit, including a limitation upon the term of the permit. Unless otherwise agreed by the Applicant, the term of a Special Use Permit approved in accordance with this Division shall not be less than fourteen (14) years.

F. Appeal. Any party aggrieved by the final decision of the Board of County Commissioners may appeal to the District Court in accordance with C.R.C.P. 106(a)(4) or other applicable law.

G. Issuance of Building Permit(s). Applicants may receive a building permit for construction of the approved Telecommunication Facility following the date of recordation of a resolution approving or conditionally approving the Special Use Permit provided that all other applicable requirements for a building permit within Park County are satisfied.

Section 5-905 Design and Performance Standards.

A. General Provisions Regarding Conformance with Design and Performance Standards. When considering a special use application for a Telecommunication Facility, the County shall require collocation rather than construction of new facilities whenever feasible. For both collocation and new construction, Applicants shall be required to conform to the requirements of this section. The Planning Commission may recommend, and the Board of County Commissioners may grant, waivers of the design and performance standards of this section where the waiver will allow for an innovative or creative design that reduces or mitigates adverse impacts upon the public related to the siting of the Telecommunication Facility.

B. Criteria Applicable to All Telecommunication Facilities and Sites. The following design and performance criteria and requirements shall apply to all Telecommunication Facilities reviewed under Sections 5-904 and 5-907 C:

1. All Telecommunication Facilities should be designed to be compatible with and incorporated into surrounding and adjacent buildings and existing or planned uses in the area. This requirement shall be accomplished through the use of compatible architectural elements such as color, texture, scale, and character.

2. Siting and installation of Telecommunication Facilities should preserve or enhance the existing character of the topography and vegetation of a site. Existing vegetation, if any, and if suitable with natural features, should be preserved and/or improved to provide screening for the facility. If existing topography of the site does not adequately screen equipment from view, fencing may be required. Fencing should not be used exclusively to screen equipment from view, but instead be supplemented with vegetation, berms, and/or landscaping boulders.

3. All Telecommunication Facilities should be sited, designed, and screened to minimize to the greatest degree possible the visibility of such equipment from surrounding properties, public streets, and locations affording public views of the site. An economic or financial hardship, by itself, shall not be considered an impediment to minimizing the visibility of a Tower, Antennae, and Support Facilities.

4. All Towers, Antennae, and equipment should be no taller than necessary for the efficient operation of the antennae equipment and space designed to permit collocation by other Telecommunication Providers as required by Section 5-905 D 3.

5. The use of security fencing should be minimized and be designed to blend into the character of the existing environment. The use of chain link wire, mesh, or metal fencing is discouraged unless substantially shielded from public view by the use of vegetation and/or landscaping boulders and painted to blend into the existing environment.

6. All Towers, Antennae, and Support facilities must be designed and certified by an engineer to be structurally sound and, at minimum, be in conformance with the County-adopted building codes, and any other standards outlined in this Division.

7. The siting of Telecommunications Facilities in areas designated in the Strategic Master Plan Visual Priority Map as "Views into Park County" (1-2-3); "Road Corridor Views" (A, AA, B, C); and "Mountain/Hill Views" (1, 2) should only be permitted if such Telecommunications Facilities are camouflaged, hidden or disguised (and provided that power and transmission lines are buried) so that the rural character of the County and priority view sheds are preserved.

C. Design and Performance Standards for Structure– or Building–Mounted Facilities. All Structure- or Building-mounted Facilities reviewed under Sections 5-904 and 5-907 C shall be designed and constructed to blend with and enhance the architectural characteristics of the accompanying building or structure.

1. Panel Antennae Standards.

a. Panel Antennae shall not protrude horizontally more than two (2) feet from the building wall and shall be painted, textured, and treated to match the building or structure to which the panel is attached.

b. Panel Antennae attached to the side of a building or structure shall not exceed the height of the roofline above the mounting point.

c. Panel Antennae mounted on rooftop mounted service equipment shall not exceed the height of the service equipment to which the Panel Antennae are attached.

d. Panel Antennae shall not be mounted in a freestanding, sled, or rack-mounted fashion on the top of a building unless: (i) there exists unscreened service equipment on the roof which will be screened from view along with the Panel Antennae; and (ii) the screening of the Antennae and equipment will be architecturally compatible with the building.

e. The County may, as a condition of approval of any special use permit for a Panel Antenna or Antennae attached to a nonconforming building or structure, require that the nonconforming building or structure be brought into conformance with these Land Use Regulations.

2. Whip Antennae Standards.

a. Where more than one Whip Antenna is attached to one building or structure, such antennae shall not interfere with each other's operations.

b. No Whip Antenna shall exceed the maximum height limitation for the zone district in which the Antenna is located.

c. The County may, as a condition of approval of any special use permit for a Whip Antenna or Antennae attached to a nonconforming building or structure, require that the nonconforming building or structure to be brought into conformance with these Land Use Regulations.

3. Support Facilities Associated with Structure- or Building-Mounted Antennae. Support Facilities associated with structure- or building-mounted Antennae reviewed under Sections 5-904 and 5-907 C are encouraged to be located in one of the following areas, which are listed in order of preference from most (a) to least (e) preferred:

   a. Inside the building or structure to which the Panel or Whip Antennae are attached.

   b. Inside an existing equipment penthouse on the roof of a building.

   c. Immediately adjacent to the exterior of an existing equipment penthouse if the shelter can be visually incorporated into the penthouse structure by the use of screening of similar style and color to the penthouse.

   d. Outside of a penthouse on the roof of a building if a parapet exists that is taller than the Support Facility.

   e. On the ground and screened according to the design criteria for other Telecommunications Facilities.

D. Design and Performance Standards for Freestanding Facilities. The following design and performance standards shall apply to all Freestanding Facilities:

1. The height of any Freestanding Facility shall not exceed one hundred ninety-nine feet unless a variance is obtained in accordance with Article III. Measurement of Tower Height for the purpose of determining compliance with all requirements of this section shall be done as described in Section 5-901, Tower Height.

2. No new Freestanding Facility shall be built in the County unless the facility is capable of supporting at least three other operating Telecommunications Facilities. The phrase "capable of supporting" means and includes: (a) the physical capability of connecting Antennae comparable in weight, size, and surface area to the Antenna installed by the Applicant on the Tower; (b) the capability of operation of another Person(s) Antennae in a comparable manner and efficiency as the Applicant's antennae; and (c) a means or system in place to facilitate the ready connection of additional Antennae to the Freestanding Facility such as, but not limited to, a form of contract approved by the Applicant to be offered and made available to others who seek to collocate on the Freestanding Facility. In the event that the Telecommunications Facility is proposed without the capability of supporting at least three other providers, the request must be justified by the applicant and approved by the Board of County Commissioners.

3. As a condition of approval of any Freestanding Facility, the County shall require the Applicant to provide a performance bond or other surety to the County that is adequate to ensure the completion of all planned and required landscaping and screening associated with the approved Freestanding Facility.

4. Freestanding Facilities shall not be located closer to any property line than a 1.1:1 setback to height ratio. The Board of County Commissioners may waive this provision for mitigating circumstances, providing that public safety is not compromised.

5. The County may, as a condition of approval of any Special Use Permit for a Freestanding Facility on a property containing a nonconforming building or structure, require that such a nonconforming building or structure be brought into conformance with these Land Use Regulations.

6. Support Facilities associated with Freestanding Facilities shall meet the following requirements:

    a. Be located in an enclosed building that is architecturally compatible with the surrounding environment or be screened completely with vegetation, berms, landscaping boulders, and/or an architecturally compatible wall or fence so the support facility is not visible from adjacent properties, streets or public areas;

    b. Where security fencing is utilized, such fencing shall enclose the minimum space necessary for safety;

    c. Be grouped as closely as technically possible to each other and the freestanding facility;

    d. Cover a surface area not to exceed four hundred fifty (450) square feet per Telecommunication Provider utilizing the Freestanding Facility;

    e. Be designed with materials, textures, treatments, and colors that are compatible with other structures and vegetation on the same parcel and adjacent parcels; and

    f. Not reduce the parking or landscaped areas below the minimum requirements for other principal uses on the property.

E. Telecommunications Facilities in Specific Zone Districts. Telecommunication facilities shall be permitted within specific zone districts in Park County follows:

1. Structure- or building-mounted facilities are permitted as a special and accessory use in all zone districts except for the P.U.D. zone district if they are attached to a lawful structure and comply with Federal Communications Commission (FCC) emission guidelines.

2. Freestanding Facilities are permitted as a special use in all zone districts except for the P.U.D. zone district if they are located more than 1.1 times their total height from all residential structures and lot lines and comply with FCC emission guidelines.

3. Structure or Building-mounted and Freestanding Facilities are permitted in the P.U.D. zone district only if such use and the specific site and design are expressly identified within the approved or amended P.U.D. plan and comply with FCC emission guidelines.

F. Use of Public Utility Transmission Facilities; Alternative Administrative Review.

1. Public utility transmission facilities, structures, and transmission poles may be utilized as a Telecommunication Site if: (a) the utility company has granted approval of the use of the facility, structure, or pole; and (b) where located in a residential zone district, the Telecommunication Facility is granted a Special Use Permit pursuant to this division; or where located in a zone district other than residential, the Telecommunication Facility has received administrative review and approval; and (c) where the Telecommunication Facility does not exceed the height of the existing transmission structure or pole.

2. Monopole Towers with a Tower Height at or less than the maximum structure height in the applicable zone district and Structure- or Building-mounted Antennae that are completely screened by RF-transparent material shall be subject to administrative review and approval by the Planning Director/County designee. The Planning Director/County designee shall approve such Towers or Antennae where the Applicant for such use demonstrates that the Towers or Antennae conform to the requirements of this section.

Section 5-906 Standards for Application Approval.

A. Applicant to Bear Burden of Proof. The Applicant shall bear the burden of presenting substantial evidence at the public hearing to support the standards for approval set forth in this section. Any decision by the reviewing body to approve, conditionally approve, or deny an application shall be based upon a consideration of the evidence presented during the public hearing. Where evidence presented is contradictory, the reviewing body shall weigh such evidence and judge the credibility and sufficiency of the evidence in rendering a decision.

B. Written Decision and Resolution Required. Every decision of the Board of County Commissioners shall be made by written resolution approved by a majority of a quorum present and voting at a regular or special meeting. The Board of County Commissioners may, following conclusion of the public hearing and prior to rendering a final decision, direct the Planning Director/County designee or County Attorney to prepare written findings and a resolution memorializing the Board's decision for presentation at a regular meeting of the Board of County Commissioners. Only upon final consideration and approval of the required written resolution shall the Board's decision become final for purposes of this Division and any appeal.

C. No Consideration of Electromagnetic Effects. All transmission Towers (radio, television, telephone, emergency broadcast, paging, etc.) shall comply with the public health standards for the electromagnetic radiation that are promulgated by the FCC. As required by federal law, the reviewing body shall not base any decision of denial of an application upon, or impose a condition upon approval concerning the environmental or health effects of radio frequency emissions of Telecommunication Facilities provided that such facilities are shown to comply with regulations imposed by the FCC concerning such emissions. The receipt of statements, testimony, or other evidence by the reviewing body concerning environmental effects of radio frequency emissions of the telecommunication facility shall not be imputed or implied as a basis for any decision of the reviewing body.

D. Required Findings for Decision.

1. For Unconditional Approval. The reviewing body must find that the application supporting materials, and the record of proceedings before the reviewing body establishes that the Applicant has met:

   a. All applicable requirements of this Division;

   b. All requirements of the applicable Zone District; and

   c. All applicable requirements of these Land Use Regulations.

2. For Approval with Condition(s). The reviewing body must find that the application, supporting materials, and the record of proceedings before the reviewing body establishes that the Applicant has met:

   a. All applicable requirements of this Division;

   b. All requirements of the applicable Zone District; and

   c. All applicable requirements of these Land Use Regulations.

   d. The condition(s) imposed upon such approval are reasonably necessary or desirable to ensure that the special use conforms to (a), (b), or (c) above. In establishing conditions of approval, such conditions shall be specifically stated within the resolution for approval in a form approved by the Planning Director/County designee or County Attorney.

3. For Denial. The reviewing body must find that the application, supporting materials, and the record of proceedings before the reviewing body establishes that the Applicant has failed to satisfy one or more specifically identified requirements imposed by:

   a. All applicable requirements of this Division;

   b. All requirements of the applicable Zone District; and

   c. All applicable requirements of these Land Use Regulations.

4. Prior to construction of an approved facility, an Environmental Assessment of the proposed action, and Wireless Telecommunication Bureau review of the Environmental Assessment, if required by Title 47 of the Code of Federal Regulations, Part 1, Subpart 1, Rule Section 1.1307, shall be conducted.

Section 5-907 Modifications to Approved Facilities.

A. Modifications Require Approval. No modification to an approved Telecommunication Facility may be made without approval of the County except for:

1. Routine and customary repairs of Towers, Antennae, and equipment that will not alter the physical appearance of the Telecommunication Facility when viewed from any boundary of the property described in the Special Use Permit.

2. The addition, substitution, replacement, and repair of equipment located within enclosed equipment structures associated with a Telecommunication Facility.

B. Minor Modifications. The Planning Director/County designee may administratively grant approval for a minor modification of an approved Telecommunication Facility where the modification does not meet the definition of Substantial Change contained within this Division.

The Planning Director/County designee may only request the submission of any plans, drawings, or other information necessary to demonstrate that the modification does not meet this Division's definition of Substantial Change; and that the modification complies with generally applicable building, electrical, and safety codes and with other laws codifying objective standards reasonably related to health and safety. Within fifteen days following the receipt of an application, the Planning Director/Designee shall review the application and determine whether or not the application is complete and the modification does not meet the definition of Substantial Change. No action shall be taken on incomplete applications, and modifications that meet the definition of Substantial Change shall be reviewed in accordance with Section 5-907 C.

C. Major Modifications. Any modification, other than a minor modification, shall be subject to approval via the following process.

1. The applicant shall submit a County application, including a detailed narrative and drawings describing the proposed modification. Within fifteen days following receipt of an application for a major modification, the Planning Director/County designee shall administratively review the application and determine whether it complies with the applicable application content requirements of this Division.

   a. Incomplete Application. The County shall not process or schedule the processing of any incomplete application. In the event the Planning Director/County designee determines that the application is incomplete, the Planning Director/County designee shall inform the Applicant in writing of the deficiencies in the application. No further processing of an incomplete application shall be undertaken until the Planning Director/County designee determines that the

Applicant has remedied the application's deficiencies and the application is complete.

b. Complete Application. In the event that the Planning Director/County designee determines that the application complies with the applicable requirements, the Planning Director/County designee shall proceed with the application, as described herein.

2. Upon determination that an application is complete, the County shall post the property, and send notification to adjacent property owners and the homeowners' association of the subdivision in which the facility is located, if existent and active.

3. A minimum of ten days subsequent to posting the property, the Planning Director/County designee shall make administrative determination regarding the application. The decision – approval, approval with conditions, or denial - shall be posted on line; and communicated to the applicant and Board of County Commissioners in writing.

4. The applicant may, within thirty days of the decision date, appeal the administrative decision in accordance with Section 3, Division 2.

Section 5-908 Abandonment.

A. If any Telecommunication Facility shall cease to be used for a period of three hundred sixty-five (365) consecutive days, the Planning Director/County designee shall notify the Owner, with a copy to the Applicant, that the Telecommunication Site will be subject to a hearing and possible determination by the Board of County Commissioners that such site has been abandoned. The Owner and Applicant shall be provided written notice of the hearing and the hearing shall be held not less than fourteen (14) days following the mailing of notice via hand delivery, regular U.S. Mail postage prepaid, or comparable delivery service to the last known addresses of the Owner. The Owner and Applicant shall be provided an opportunity to show at the hearing, by a preponderance of the evidence that the Telecommunication Facility has been in use or under repair during such period. If the Owner or Applicant fails to show that the facility has been in use or under repair during the period, the Board of County Commissioners shall issue a final determination of abandonment for the Telecommunication Site and shall order removal of the Telecommunication Facility by written demand sent via registered U.S. mail, return receipt requested, to the Owner and the Applicant. Upon issuance of the final determination of abandonment and delivery order for removal, the Owner shall, within eighteen (18) months or such longer period determined by the Board of County Commissioners as reasonable to permit removal, cause the Telecommunication Facility to be dismantled and removed.

B. Telecommunication Facilities declared abandoned by the County in accordance with this section and which remain in place following the deadline for removal stated in an order for removal shall:

1. Constitute a public nuisance and shall be subject to abatement as provided by these Land Use Regulations; and

2. Be subject to removal by the County utilizing funds placed into escrow for removal of a Telecommunication Facility and/or public funds; and

3. Be subject to any other remedy available to the County to cause the removal of the Telecommunication Facility; and

4. Result in the immediate termination of the special use permit issued for the Telecommunication Facility.

Section 5-909 Expiration, Revocation, and Inspections

A. Permit Expiration. Special Use Permits for Telecommunication Facilities shall expire upon the end of any term of the permit as stated in Section 5-904 G, as applicable.

B. Permit Revocation. The Board of County Commissioners may, following notice and a hearing as generally provided in Section 5-908 A, revoke any Special Use Permit for Telecommunication Facilities and order the removal of the Telecommunication Facility upon a finding by the Board of County Commissioners that:

1. The Telecommunication Facility fails to substantially conform with a requirement of this Division or a condition of the special use permit and the applicant or Owner failed to remedy such noncompliance within sixty (60) days of the date of mailing of a notice of noncompliance; or

2. The Telecommunication Facility fails to substantially conform with a representation stated in the application, and the Applicant or Owner failed to remedy such noncompliance within sixty (60) days of the date of mailing of a notice of noncompliance.

C. Inspections. The County or its agents shall have authority to enter onto the property upon which a Telecommunication Facility is located to inspect the facility for the purpose of determining whether the facility conforms to the applicable provisions of this Division, these Land Use Regulations, the application, site plan, or special use proposal submitted to and approved by the County, or federal or state law.

Section 5-910 Removal of Facilities.

A. Removal Required. A Telecommunication Facility shall be removed within one hundred eighty (180) days, or such longer period determined by the Board of County Commissioners as reasonable to permit removal, of the following:

1. The date of expiration of the Special Use Permit.

2. The date of a final declaration of abandonment by the Board of County Commissioners.

3. The date of revocation of a permit.

B. Restoration of Property. Where removal of a Telecommunication Facility is required by this Division, the Telecommunications Provider shall, at the provider's cost and expense, remove the facility and restore the property to a condition substantially similar to that existing before the installation. Such removal shall not, however, include removal of any installed landscaping unless the County approves removal of landscaping.

DIVISION 10 OIL AND GAS OPERATIONS

Section 5-1000 Purpose.

A. General Purpose. The purpose of this Division is to establish rules that provide reasonable limitations and safeguards for the exploration and production of oil and gas resources in the county. The goal is to provide a framework for the responsible exploration and production of oil and gas resources in a manner that conserves other natural resources, that is sensitive to surrounding land uses, and that mitigates adverse impacts to and protects the public health, safety, welfare and the environment of the County. The County will review permit applications concurrently with other required state or federal agency permitting processes whenever possible.

B. Relationship to Other Park County Requirements. Any and all Oil and Gas Operations and any and all maintenance to or on an oil or gas well, production facility, or pipeline shall require compliance with all applicable Park County Regulations and requirements including but not limited to the Park County Standards and Specifications for Road and Bridge Construction.

Section 5-1001 Authority.

These sections of the Park County Land Use Regulations are authorized by, *inter alia*, C.R.S. § 30-28-101 et seq., § 30-28-201 et seq.; and § 29-20-101 et seq.

Section 5-1002 Applicability.

A. All Oil and Gas Operations shall Comply with Division 10. All Oil and Gas Operations in the unincorporated areas on public and private land within the County shall comply with this division.

B. Oil and Gas Permit Required**.** No Person shall engage in, cause, allow or conduct any Oil and Gas Operations prior to obtaining an Oil and Gas Permit unless the operations fall within the exemption in Section 5-1002C.

C. Oil and Gas Operations Exempted from Submittal and Review Requirements. The following Oil and Gas Operations are exempt from this section:

1. Mapping activities. Mapping activities that do not result in any surface disturbance.

2. Existing oil and gas operations**.** Operation and maintenance of well sites, wells and pipelines, that are legal nonconforming uses under section 5-1002D. Any expansion of a nonconforming oil and gas operation shall comply with section 5-1002D.

3. Coal mine methane venting integral and essential to existing coal mining operation. Coal mine methane venting from a permitted coal mine, that does not produce or distribute methane off-site, and that is an integral and essential component of the existing coal mine, shall not be subject to this section.

D. Nonconformities**.** Within unincorporated Park County, there are Oil and Gas Operations that were legally established before the effective date of this section that do not conform to the legal requirements of this section. The purpose of this section is to regulate those nonconforming operations.

1. Non-abatement provision**.** Unless otherwise stated herein, it is the intent of this subsection that nonconforming Oil and Gas Operations that were legally established before the effective date of this section shall be permitted to continue.

2. Continued operation of legally established nonconforming Oil and Gas Operations shall be allowed. Legally established non-conforming Oil and Gas Operations, including

ordinary repairs and maintenance thereto, shall be allowed to continue, so long as they remain otherwise legal and comply with the requirements of this section.

3. Limited extension or expansion. A legal nonconforming Oil or Gas Operation shall only be extended, expanded or altered in a manner that decreases or does not expand, the nonconforming use. Any extension or expansion of a legal nonconforming Oil or Gas Operation onto land outside of a specified area used prior to the adoption of this section shall comply with the requirements of this section.

4. Relocation**.** A legal nonconforming Oil or Gas Operation shall not be moved, in whole or in part, unless the relocation brings the Oil or Gas Operation into compliance with the requirements of this section.

5. Abandonment of Nonconforming Oil or Gas Operation**.** If any legal nonconforming Oil or Gas Operation is abandoned for a period of one (1) year, then the renewal of that use or the use of that structure shall not be initiated until after a review by the Planning Department has determined that the renewed use will not pose a threat to public health, safety, welfare or the environment. For the purpose of this subsection, "abandonment" means the intent to not continue the legally established nonconforming Oil or Gas Operation, coupled with the discontinuance of the nonconforming Oil or Gas Operation.

6. Damage or destruction**.** A legal nonconforming Oil or Gas Operation that is demolished or destroyed by an Act of God or through any manner not willfully accomplished by or for the owner may be restored within one (1) year of the damage or destruction as of right, regardless of the extent of demolition or destruction, conditioned upon issuance of each required permit, pursuant to this section. A one time, one (1) year extension of the initial year may be granted by the Planning Director upon findings that:

   a. Hardship**.** There would be a substantial hardship to the owner without the extension; and,

   b. Substantial effort to restore. Within the first eight (8) months after the destruction, the owner has substantially cleaned up and removed, if unusable, the damaged operation.

Section 5-1003 Application Submittal Requirements for Oil and Gas Permits.

A. Application to the Planning Department**.** An applicant seeking an Oil and Gas Permit to conduct an Oil and Gas Operation shall submit an application to the Planning Department containing the information in this Section 5-1003. An applicant shall provide a copy of an application for permit to drill or other application submitted to the Colorado Oil and Gas Conservation Commission and/or Federal Environmental Assessment (EA) or Environmental Impact Statement (EIS) as documentation for one or more of the following submittal requirements in this Section 5-1003 if it contains information sufficient to demonstrate compliance with this section and that information is highlighted.

B. Permit Submittal Requirements for Oil and Gas Operations. An applicant for a permit to conduct Oil and Gas Operations shall submit the following information:

   1. Applicant**.** The name, address, telephone and fax numbers, and e-mail address for the applicant; and if the applicant is to be represented by an agent, a notarized letter signed by the applicant authorizing the agent to represent the applicant and also stating the same information for the agent.

   2. A PROPERLY EXECUTED AGREEMENT FOR PAYMENT OF DEVELOPMENT REVIEW EXPENSES IN A FORM PROVIDED BY THE PLANNING DEPARTMENT.

3. Surface ownership**.** Documentation of surface ownership, evidence of surface owner notification, and copies of any surface ownership agreements and leases affecting the area where the Oil and Gas Operation will be conducted. Name, address, telephone and fax numbers and e-mail address of the owner of the property.

4. Mineral estate ownership**.** Documentation of mineral ownership, including name, address, telephone and fax numbers and e-mail address of the owner of the mineral rights.

5. Parcel location**.** The legal description (referencing lot and block or tract numbers, homesteads, or metes and bounds), property address and common description of the Parcel on which the Operation is proposed to be located. A copy of the recorded deed or lease to the Parcel should be included.

6. Identification of previously approved uses. List any permits, which have been previously approved for the Parcel on which the Operation is proposed.

7. Characteristics and current condition of the operation location**.** Identification of physical characteristics and current conditions of the site where the Operation is proposed to occur, including streams, irrigation ditches, ponds, soils, roads, vegetation, geologic hazards, and any other characteristics requested by the Planning Department to determine potential impacts. Indications if trees or other vegetation have been removed and changes caused either by weather-related or human activity within the past five years.

8. List of adjacent landowners**.** A listing of all landowners and land uses that are within three (3) miles from the boundaries of the Parcel on which the project is proposed, including all properties that are separated from the Parcel by a roadway or would be adjacent to the Parcels except for the existence of the roadway. The source for the best-available information to identify those landowners is the Park County assessor's office.

9. Vicinity map**.** A vicinity map, which shall, at a minimum, include the following:

    a. Operation location**.** Location of the operation on a United States Geological Survey quadrangle map or on a recorded plat if the proposed oil and gas operation is within an approved subdivision, with the location highlighted so that it is easy to see.

    b. Topographic features**.** Streams, lakes, ponds, wetlands, contour lines and elevations, within three (3) miles of the proposed well pad.

    c. Roads**.** All public and private roads that traverse and/or provide access to the proposed Oil and Gas Operation, and identification of the public or private entity having jurisdiction over each road(s).

    d. Easements**.** Easements recorded or historically used that provide access to or across, or other use of, the Parcel.

    e. Boundaries of districts, municipalities or subdivisions. Locations of special district boundaries, municipalities or subdivisions within one (1) mile of the site.

    f. Proximity of other wells and other Oil and Gas Operations**.** Location of other wells and other Oil and Gas Operations within one (1) mile of the site.

    g. Proximity of Groundwater wells. Location of all Groundwater wells within three (3) miles of the site.

10. Site plan map**.** A map with north arrow and appropriate scale for the Parcel where the Oil and Gas Operation will occur, indicating the following:

    a. Easements and rights-of-way. Utility easements and rights-of-way.

    b. Improvements. Existing improvements.

    c. Proposed facilities. Proposed facilities such as structures, pipelines, tanks, wells, pits, Flow Lines, impoundment facilities, staging and storage areas and equipment.

    d. Site features. Site features such as Special Flood Hazard Areas, water bodies, drainage patterns, aquatic habitat, vegetative cover, wildlife migration routes and Significant wildlife habitat.

    e. Topography. Existing and proposed topography at five-foot intervals or some other interval established by the Planning Department as necessary to portray the direction and slope of the area affected by the Oil and Gas Operation.

    f. Lease boundary**.** All boundaries of the lease(s) upon which the Operation will take place.

11. Applications and permits**.** Copies of all local, state and federal applications authorizing or required for the Operation, and permits, when issued.

12. Operation plan**.** A plan including the method and schedule for drilling, completion, transporting, production, and post-operation.

13. Weed management plan**.** A plan for the management and prevention for noxious weeds on the site.

14. Access and transportation routes**.** A map that identifies the access route to, and within the Parcel, and a narrative estimating the number and types of vehicles anticipated per day, including weights, that will travel over the route.

15. Identification of water structures**.** Identification of irrigation ditches and other water structures, ownership of water rights appurtenant thereto, and evaluation of any impacts to the structures, water rights or water quality.

16. Roadway impact analysis**.** An analysis of the impacts of the operation to the roadway system within the County.

17. Wildlife and wildlife habitat analysis. After consultation with the Colorado Division of Parks and Wildlife and the U.S. Fish and Wildlife Service, the applicant shall provide an analysis of existing wildlife and Sensitive Wildlife Habitat, an evaluation of the impacts of the operation on wildlife and Sensitive Wildlife Habitat, and proposed mitigation.

18. Vegetation**.** A written description of the type, character, and density of existing and proposed vegetation on the Parcels, a summary of the impacts of the operation on vegetation, and proposed mitigation.

19. Emergency response plan**.** An emergency response plan that addresses fire protection and hazardous spills, including the name and contact information for the applicant's incident commander, proposed signage, access/evacuation routes, and health care facilities anticipated to be used. The plan shall include a provision for the oil and gas Operator to reimburse the appropriate emergency response service providers for costs incurred in connection with the emergency.

20. Water quality non-point source Impacts.

    a. Identification of all water bodies**.** An inventory and location of all water bodies within three (3) miles of the proposed oil and gas operation.

    b. Description of existing water quality**.** A description of existing baseline water quality of all surface and shallow groundwater sources within three (3) miles of the Parcel, based upon a current baseline water quality analysis.

    c. Non-point source impacts to water quality**.** A description of potential Non-Point Source Pollution associated with the proposed Oil and Gas Operation and proposed mitigation.

    d. Mitigation and avoidance**.** Proposed avoidance and mitigation measures to minimize the water quality impacts associated with the operation. Proposed mitigation may include an erosion control plan required under this Section 5-1003.

21. Cultural survey**.** A cultural, historical, and archeological survey of the Parcel prepared by a qualified professional.

22. Drainage and erosion control plan**.** A plan that identifies existing and proposed drainage patterns and the methods for controlling erosion during construction and operation phases of the operation.

23. Wildfire hazards**.** An assessment of wildfire hazards within one (1) mile of the site, and a plan for mitigating wildfire hazards.

24. Geologic hazards**.** An assessment of the geologic hazards including existing faults within three (3) miles of the site, and a plan for mitigating such hazards if a significant risk exists for impacts associated with the project.

25. Existing and future land uses. A written summary of the existing uses of the Parcel and the proposed future land uses of the Parcel after completion of the Operation.

Section 5-1004 Coordination with State or Federal Actions and County Permit Process.

Final action by the County on an Oil or Gas Permit application may be delayed until any required Environmental Assessment (EA), Environmental Impact Statement (EIS) or other permit by a state or federal agency is issued, so that the County will have the benefit of the analysis and determinations made by other entities in reaching its own decision.

Section 5-1005 Permit Review Procedures for Oil and Gas Operations.

A. General Review Procedures.

1. Determination of completeness by the Planning Department**.** The Planning Department shall determine whether the application is complete and includes all of the required information. The Planning Department shall, within ten (10) days of receiving the application, and notify the applicant in writing that the application is either complete or incomplete, or shall indicate a date by which such determination shall reasonably be made.

2. Application is not complete**.** If the application is not complete, the Planning Department shall inform the applicant of the deficiencies in writing and shall take no further action on the application until the deficiencies are remedied. If the applicant fails to correct the

deficiencies within 60 days of the postmarked or certified date of the mailing of the notification of incompleteness, the application shall be considered withdrawn.

3. Application is complete**.** If the application is complete, the Planning Department shall certify it as complete and assign the application an agenda date with the Planning Commission on the next available agenda that accommodates notice and referral requirements, and provide notification of the meeting date to the applicant. A determination that an application is complete shall not constitute a determination that it complies with the applicable standards of this section.

4. Review by Referral Agencies**.** Upon determination that the application is complete, the Planning Department may require the application materials or any portion thereof be submitted for professional analysis and recommendations by any other review agency, organization, or technical consultant deemed appropriate and necessary to complete the review, including other County offices and departments, municipal, state, or federal agencies having an interest in or authority over all or part of the proposal, and consultants. The Referral Agency review may include, but is not limited to the Advisory Board on the Environment, the Park County Watershed Districts, Colorado Division of Parks and Wildlife, Colorado Geological Survey, and the Colorado Oil and Gas Conservation Commission. The applicant shall be responsible for any costs associated with the referral. The referral review and comment period shall be twenty-one (21) days from the date that the application is deemed complete.

B. Oil and Gas Operation Permit Review.

1. Review by the Planning Commission**.** The Planning Commission following a properly noticed public hearing shall consider the application for a Minor Oil and Gas Operation permit.

   a. Schedule public hearing by the Planning Commission**.** A public hearing by the Planning Commission shall be scheduled within forty-five (45) calendar days of the date of application completeness determination.

   b. Notice of hearing**.** Public notice shall be given in compliance with Section 5-1007 and the following:

      i Publication of notice**.** The notice shall be published no less than fifteen (15) days prior to the date of the hearing.

      ii Notice to affected parties**.** No less than fifteen (15) days prior to the date of the public hearing by the Planning Commission, the applicant shall provide written notice of the public hearing to affected parties as that term is used in section 5-1007 A 2.

      iii Certified mail**.** The applicant shall mail the notice by certified mail, return receipt requested.

2. Planning Commission decision**.** Following the public hearing, the Planning Commission shall approve, approve with conditions, or deny the application based upon the Oil and Gas Operation standards set forth in Section 5-1006 of this division.

3. Review and decision by the Board of County Commissioners**.** Following a public hearing and after considering the recommendation of the Planning Commission, the Board shall approve, approve with conditions or deny the application for a Minor Oil and Gas Operations Permit, based upon the Oil and Gas Operations standards set for in Section 5-1006. If the Operation complies with the Oil and Gas Operation standards, the application shall be approved. If the Operation does not comply with the Oil and Gas

Operation standards, it shall be denied, or conditions shall be imposed to ensure compliance with the Oil and Gas Operation standards.

Section 5-1006 Oil and Gas Operation Standards.

An Oil and Gas Operation, including horizontal and directional drilling, shall comply with the following standards and criteria:

A. Drainage and Erosion Control**.** The Oil and Gas Operation shall not cause Significant erosion or sedimentation and shall be conducted in accordance with the drainage and erosion control plan.

B. Access Roads**.** All public access roads, under the jurisdiction of Park County, shall be constructed and maintained in compliance with the *Park County Standard Specifications for Road and Bridge Construction*, or otherwise as necessary to accommodate the traffic and equipment related to the Oil and Gas Operation and emergency vehicles.

C. Public Roadway and Traffic Impacts.

1. Ingress and egress**.** Ingress and egress points to public roads shall be located, maintained and improved to assure adequate capacity for efficient movement of existing and projected traffic volumes and to minimize traffic hazards.

2. Maintenance agreement or financial assurance**.** If the projected use of the public roads resulting from the Oil and Gas Operation will result in a need for an increase in roadway maintenance or snow removal, the County shall require the Operator to:

a. Enter into an agreement with the County whereby the Operator provides for private maintenance and snow removal, or reimburses the County for such increased costs; and/or

b. Provide a bond or other financial assurance in an amount acceptable to the County to cover the costs of impacts to the roads.

D. Wildlife and Wildlife Habitat. The Oil and Gas Operation shall not cause Significant Degradation of wildlife or Sensitive Wildlife Habitat. The applicant shall submit maps showing the defined habitat within the project area including but not limited to listed threatened endangered species.

E. Livestock and Livestock Grazing. The Oil and Gas Operation shall not cause Significant impact to livestock, grazing permits, or grazing permittees. Fencing or other agreements between private grazing operations and the oil and gas Operator may be used to satisfy this requirement.

F. Recreation Impacts**.** The Oil and Gas Operation shall not cause a Significant Degradation in the quality or quantity of recreational activities in the County such as hunting, hiking, skiing or related activities.

G. Water Quality.

1. No Significant Degradation**.** The Oil and Gas Operation shall not cause Significant Degradation in the quality or quantity of surface waters from the addition of Non-Point Source Pollution.

2. Water wells**.** The Oil and Gas Operation shall not cause Significant Degradation in the water quality or water pressure of any public or private water wells.

H. Water Body Setbacks**.** Activities associated with the Oil and Gas Operation shall be located a minimum of 500 feet from any Water Body unless such a setback would interfere with spacing requirements established by the Colorado Oil and Gas Conservation Commission.

I. Air Quality. The oil and gas operation shall not cause significant degradation to air quality.

J. Cultural and Historic Resources**.** The Oil and Gas Operation shall not cause Significant Degradation of cultural or historic resources.

K. Wildlife Hazard**.** The Oil and Gas Operation shall not cause a Significant risk of wildfire hazard.

L. Geologic Hazards**.** The Oil and Gas Operation shall not cause a Significant risk of geologic hazards.

M. Impact Mitigation Costs**.** The Operator shall bear the proportionate cost of mitigating the impacts caused by the Oil and Gas Operation.

N. Access to Records**.** Oil and gas Operators shall make and keep appropriate books and records covering their Oil and Gas Operations. Such books and records shall be kept on file and be available for inspection by the County during reasonable times for a period of at least five (5) years from final permit date of approval**.**

O. Emergency Response**.** Oil and Gas Operations shall provide the County with a written emergency response plan for the potential emergencies that may be associated with the operation of the facilities. This shall include, but not be limited to any or all of the following:

1. Explosions, fires, gas or water pipeline leaks or ruptures, hydrogen sulfide or other toxic gas emissions, and hazardous material vehicle accidents or spills.

2. Operation specific emergency preparedness plans are required for any Oil and Gas Operation that involves drilling or penetrating through known zones of hydrogen sulfide gas.

3. The plan shall include a provision for the Operator to reimburse the appropriate emergency response service provider for costs incurred in connection with the emergency.

P. Impact Mitigation

1. Closed loop systems.

2. “Green” hydraulic fracturing materials.

3. Pit liners are required and must be removed.

4. All hazardous materials must be removed including drill cuttings.

Q. Financial Guarantees**.** Financial security shall be provided by the Operator to guaranty any mitigation required by the County as a condition of approval of an Oil and Gas Permit. The Operator shall enter into a security agreement with the County consistent with the following:

1. Development improvement agreement shall be required**.** When mitigation is a required component of an Oil and Gas Permit, the Board shall require as a condition of permit approval that the Operator execute and fund with Park County a development improvement agreement acceptable to Park County in form and substance, and amount and type of security. The development improvement agreement shall constitute the Operator’s agreement to perform all conditions, identified as requirements of permit approval. The development improvement agreement shall specifically identify such requirements including plans, drawings and schedules for completion and shall be substantially in the form referenced in Appendix C of these Land Use Regulations.

2. Financial security**.** The development improvement agreement shall require the Operator to provide to the county a guarantee of financial security, acceptable to the county, in an amount established by the board based on no less than one hundred twenty five percent (125%) of the estimated cost of the conditions to be performed, and payable on demand to the County. The purpose of the guarantee of financial security is to assure that the public and private improvements, and all other conditions identified as requirements of permit approval are timely and fully completed, that all mitigation requirements and permit conditions are timely and fully performed, and that all impacted areas are timely and fully reclaimed.

3. Ensured completion of conditions**.** The development improvement agreement shall provide that if the Board determines that any of the required conditions are not performed as provided in the agreement, including reasonable requirements for the correction of deficiencies upon notice thereof, the Board may draw upon the financial security as may be necessary to complete the improvements in accordance with the specifications included in the agreement and the board may exercise any or all of the other remedies available to it pursuant to the agreement and this section.

4. Certification of completion and release of security**.** The development improvement agreement may include requirements for certification of completion, partial releases of the security, and holdover of security to ensure repairs or replacement, demonstrated performance of required facilities, substitution of security, and other requirements deemed appropriate by the Board.

5. Form of agreement**.** A general form of the development improvement agreement may be obtained from the County Attorney's office. The County at its sole discretion may modify this form of agreement from time to time without formal amendment to this section.

Section 5-1007 Public Notice.

Public Notice Requirements**.** The following shall be required for any required public notice:

A. Publication of notice**.** The Planning Department shall be responsible for publishing the notice of public hearing and shall place a legal notice in the County's official newspaper. The legal notice shall be published at least once. The notice shall be published no fewer than the identified days prior to the date of the hearing, as required in each individual Oil and Gas Permit section. The applicant shall be responsible for the cost of publication.

B. Notice to affected parties**.**

1. Adjacent property owners**.** The applicant shall provide written notice to owners of real property within 1500 feet of the subject Parcel when the Oil and Gas Operation is located on private land, and within 1500 feet of the section (640 acres) in which the Oil and Gas Operation is located when the Operation is located on public land. The notice shall be prepared by the Planning Department and a copy provided to the applicant for mailing. The notice shall include a notice of the hearing, a description of the Oil and Gas Operation and a map showing the location of the proposed Operation. The list of property owners to whom notice is mailed shall be compiled by the applicant using the most current list of property owners on file with the office of the Park County assessor. The burden is on the applicant to obtain complete and accurate current names and addresses for property owners to whom notice shall be given.

2. Owners of water rights**.** The applicant shall make reasonable efforts to provide written notice to any owners of water rights in any ditches or other water structures that may reasonably be impacted by the proposed Oil and Gas Operation. The applicant shall compile the list of owners of such water rights who may reasonably be affected by the

operation by contacting the local water commissioner who represents the Colorado Division of Water Resources.

3. Owners of non-adjacent property within an existing subdivision, or 35-acre tract development**.** If any part of an existing subdivision or 35-acre tract development is within 1500 feet of the subject Parcel when the Oil and Gas Operation is located on private land, or within 1500 feet of the section (640 acres) in which the Oil and Gas Operation is located when the Operation is located on public land, the applicant shall notify all of the surface landowners within the existing subdivision or 35-acre tract development.

C. Certified mail**.** The applicant shall mail the public notice by certified mail, return receipt requested, to all required property owners of record and owners of water rights. The applicant shall submit a list of such property owners and owners of water rights and proof of mailing to the Planning Department. For a notice of public hearing, the applicant shall provide the list of property owners and proof of mailing to the Planning Department at least one week prior to the public hearing.

D. Validity of notice**.** If the applicant makes reasonable good faith efforts to accomplish the notice responsibilities identified above, then the failure of any property owner to receive notice shall not affect the validity of hearing or other conduct of the Board.

Section 5-1008 Enforcement and Penalties.

A. Oil and Gas Operations in Violation of These Regulations**.**

1. Oil and gas Operators that have not obtained a permit in compliance with these Regulations or do not comply with Oil and Gas Permit requirements. Any Operator engaging in Oil and Gas Operations who does not obtain an Oil and Gas Permit pursuant to this section, who does not comply with Oil and Gas Permit requirements, or who acts outside the jurisdiction of the Oil and Gas Permit may be enjoined by the County from engaging in such Oil and Gas Operations and may be subject to such other criminal or civil liability as may be prescribed by law. In addition, if the County prevails in whole or part in any action, the operator shall pay all reasonable attorney fees and expert costs incurred by the County.

2. Suspension of oil and gas permit**.** If the County determines at any time that there is a violation of the conditions of the Oil and Gas Permit or that there are material changes in the Oil and Gas Operation as approved by the permit, the Planning Director or designee may, for good cause temporarily suspend the Oil and gas Permit. In such case, upon oral or written notification by the Planning Director or designee, the Operator shall cease operations immediately. The Planning Director or designee shall forthwith provide the Operator with written notice of the violation or identification of the changed condition(s). The Operator shall have a maximum of fifteen (15) days to correct the violation. If the violation is not timely corrected, the permit may be further suspended pending a revocation hearing. The Operator may request an immediate hearing before the Board regarding the suspension. The Board shall hold the hearing within ten (10) days of the Operator's written request.

3. Revocation of Oil and Gas Permit**.** The County may, following notice and hearing, revoke an Oil and Gas Permit granted pursuant to this section if any of the activities conducted by the Operator violate the conditions of the Oil and Gas Permit or this section, or constitute material changes in the oil and gas operation approved by the county. The County shall provide written notice to the Operator of the violation or the material changes, and the time and date of the hearing. No less than thirty (30) days prior to the revocation hearing, the County shall provide written notice to the permit holder setting forth the violation and the time and date for the revocation hearing. Public notice of the revocation hearing shall be published in a newspaper of general circulation not less than

thirty (30) days prior to the hearing. Following the hearing, the County may revoke the Oil and Gas Permit or may specify a time by which action shall be taken to correct any violations of the Oil and Gas Permit to avoid revocation.

B. Transfer of Permits**.** An Oil and Gas Permit may be transferred only with the written consent of the County. The County shall ensure, in approving any transfer, that the proposed transferee can and will comply with all the requirements, terms, and conditions contained in the Oil and Gas Permit and this section, and appropriate state and federal regulations and conditions, that such requirements, terms, and conditions remain sufficient to protect the health, welfare, and safety of the public, and the environment; and that an adequate guaranty of financial security can be timely made.

C. Inspection**.** The County may enter and inspect any property subject to this section at reasonable hours for the purpose of determining whether an Oil and Gas Operation is in violation of the provisions of this section.

D. Judicial Review**.** Any action seeking judicial review of a final decision of the County shall be initiated within thirty (30) days after the decision is made, in the District Court in and for the County of Park, pursuant to Rule 106 of the Colorado Rules of Civil Procedure.

E. No Review or Approval for Persons Subject to Enforcement Action**.** No permit application shall be processed or approved pursuant to this section for an Operator, or for property that is subject to an ongoing enforcement action.

Section 5-1009 Permit Duration.

A. Commencement of Operation. The Operation shall be commenced within one year of the issuance of an Oil and Gas Permit under this section or the permit shall terminate and be of no force and effect.

B. Completion of Operation**.** The Operation shall be completed within one (1) year of commencement of operation under this section unless a greater period of time is agreed to by the County in writing prior to the expiration of one year. At the end of one year or such additional term that may be agreed to by the county, the permit shall terminate and be of no force and effect, and any land disturbance shall be reclaimed immediately.

Section 5-1010 Amending this Section.

A. Purpose**.** The purpose of this section is to provide a process by which the Board may, from time to time, amend, supplement or repeal this section.

B. Initiation**.** The Board of County Commissioners or the Planning Commission may initiate an amendment to this section.

C. Process**.** The following process shall apply to an application for an amendment to this section:

1. Board motion**.** The Board of County Commissioners may initiate an amendment by motion directing the Planning Director to submit a proposed amendment and report to the Planning Commission for review and for further action pursuant to this section.

2. Planning Commission initiative**.** The Planning Commission may initiate an amendment by submitting a written recommendation for proposed amendment to the Board of County Commissioners. If the Board chooses to go forward the Planning Commission initiative the Board shall direct the Planning Director to submit a report to the Planning Commission for review and further action pursuant to this section.

3. Review by the Planning Commission**.** The Planning Commission shall review the report of the Planning Director. The Planning Commission shall consider the standards below and shall make a recommendation to the Board of County Commissioners to approve, approve with modification, table for further study or deny the proposed amendment.

4. Board of County Commissioners public hearing**.** The Planning Commission's recommendation shall be forwarded to the Board of County Commissioners, together with a complete copy of the Planning Director's report and the Board shall conduct a public hearing within 14 days of receipt of the recommendation.

5. Board of County Commissioners review and action**.** The Board shall consider the proposed language, any relevant support materials, the Planning Director's report, the Planning Commission's recommendation, the public testimony and evidence given at the public hearing, and compliance of the language with standards below. Following closure of the public hearing, the Board may, by written resolution, adopt the amendment, adopt the amendment with modifications, table for further study or deny the amendment. Such resolution shall include findings that address the review standards below.

D. Review Standards**.** The wisdom of amending the text of these Regulations is a matter committed to the legislative discretion of the Board of County Commissioners and is not controlled by any one factor. In determining whether to adopt the proposed amendment, adopt the amendment with modifications, table for further study or deny the amendment, the Board of County Commissioners shall consider among other factors the following:

1. Consistency with any comprehensive plan adopted by Park County**.** Consistency of the proposed amendment with any comprehensive plan that may be adopted by Park County;

2. Changed conditions**.** Changed conditions, including the economy of Park County;

3. Effect of the proposed amendment on the natural environment including water, air and wildlife which cannot be mitigated;

4. Community needs. Community needs;

5. Development pattern. Development pattern;

6. Changes in or clarification to applicable law**.** Changes in or clarification to applicable law;

7. Public health, safety and welfare**.** Public health, safety and welfare;

8. Compliance with any applicable intergovernmental agreements adopted by Park County.

Section 5-1011 Definitions.

Where a term used in this section is not defined, the definitions in Article IV of the Park County Land Use Regulations shall apply.

Abandonment (Of Nonconforming Use): The intent to not continue the legally established nonconforming Oil and Gas Operation coupled with the discontinuance of the nonconforming Oil and Gas Operation.

Aggrieved Party: The applicant, the owner of the subject property, or any Person, or member of the public.

Board: The Board of County Commissioners of Park County, Colorado.

Code: Park County Land Use Regulations (current adoption)

County: Park County, Colorado, its officers, employees and agents.

Degradation: Lowering in grade or desirability; lessening in quality.

Flow Lines: Also known as or called gathering lines. Those segments of pipe from the wellhead downstream through the Production Facilities ending at one of the following:

A. In the case of gas lines, the gas metering equipment; or

B. In the case of oil lines, the oil loading point or lact unit; or

C. In the case of water lines, the water loading point, the point of discharge to a pit, or the injection wellhead.

Groundwater: Subsurface waters in a zone of saturation.

Non-Point Source (NPS) Pollution: Pollution that is caused by or attributable to diffuse sources. Typically, NPS pollution results from land runoff, precipitation, atmospheric deposition, or percolation.

Oil and Gas Operations: Exploration for oil or gas, including but not limited to conventional oil and gas and coal bed methane gas; the siting, drilling, deepening, recompletion, reworking, refracturing or abandonment of an oil and gas well; Production Facilities and operations including the installation of Flow Lines and gathering lines; construction, site preparation, reclamation and related activities associated with the development of oil and gas resources.

Operation: Oil and gas operations.

Operational Conflict: The application of the County standard as would, as a matter of law, material impede or destroy the state interest in oil and gas or would stand as an obstacle to the accomplishment and execution of congressional purposes.

Operator: The applicant, a parent or subsidiary entity or Person, or an entity that has a financial interest in the operation.

Parcel: A tract or lot of land upon which the operation will occur.

Person: Any individual, partnership, corporation, association, company, or other public or corporate entity, including but not limited to the state or federal governments, and any of their political subdivisions, agencies, or instrumentalities.

Planning Commission: Park County Planning Commission.

Production Facilities: All storage, separation, treating, dehydration, artificial lift, power supply, compression, pumping, metering, monitoring, Flow Line, and other equipment directly associated with oil wells, gas wells, or injection wells.

Referral Agency: An agency, organization, or technical consultant deemed appropriate and necessary, by the County, to review an application and provide professional analysis and recommendations, including without limitation other county offices and departments, municipal, state, or federal agencies having an interest in or authority over all or part of the application or permit and legal consultants.

Regulation(s): This section for oil and gas operations.

Sensitive Wildlife Habitat: A natural or man-made environment that contains the elements of food, shelter, water, and space in a combination and quantity necessary to sustain one or more wildlife or plant

species at stable population levels in historically-use habitats. Sensitive wildlife habitat areas include, but are not limited to, nesting, brood rearing areas, rookeries, leks, migration corridors, calving and fawning grounds for big game; critical winter range for big game and small game.

Significant: Of considerable or substantial consequence.

Site: An area one (1) mile in radius around an existing or proposed well pad.

Significant Adverse Effect/Impact: An impact of an action, after mitigation, that is considerable or substantial, and unfavorable or harmful; includes social, economic, physical, health, aesthetic and historical impact, and biological impacts including but not limited to, effects on natural resources or the structure or function of affected ecosystems.

Water Body: A perennial or intermittent river, stream, lake, reservoir, pond, spring or wetland, but does not include irrigation ditches or roadway drainage ditches or artificial lakes or ponds or wetlands that are created and used for the primary purpose of agricultural operations. A Water Body may be described as one of the following:

A. **Intermittent River, Stream, Lake, Reservoir, Pond, Spring or Wetland.** A Water Body that normally holds water or flows at least 60 days a year as a result of ground water discharge or surface runoff.

B. **Natural Water Body.** A Water Body not created for the purpose of a land use change.

C. **Perennial River, Stream, Lake, Reservoir, Pond, Spring or Wetland.** A Water Body that normally holds water or flows continuously during all of the year as a result of ground water discharge or surface runoff.